Tool Storage Solutions

Proven Techniques for Perfect Dadoes & Grooves

Woodsmith®

www.Woodsmith.com

Vol. 24 / No. 141

Use Basic Joinery and Build a Beautiful

Display Cabinet

Also Inside:

- Coffee Table: A Classic Design with a *Surprise!*
- Do-It-Yourself Outdoor Lighting

A Publication of August Home Publishing

Woodsmith

No. 141 June, 2002

Publisher Donald B. Peschke
Editor Terry J. Strohman
Senior Editor Jon Garbison
Assistant Editor Brian McCallum
Contrib. Editor Vince Ancona
Art Director Todd Lambirth
Senior Illustrators David Kreyling, Dirk Ver Steeg, Harlan V. Clark
Graphic Intern Jonathan Eike

CREATIVE RESOURCES
Creative Director: Ted Kralicek • *Project Developer:* Ken Munkel • *Sr. Project Designers:* Kent Welsh, Ryan Mimick • *Project Designer:* Chris Fitch • *Shop Craftsmen:* Steve Curtis, Steve Johnson • *Sr. Photographer:* Crayola England

SPECIAL PUBLICATIONS
Corp. VP: Douglas L. Hicks • *Art Director:* Douglas A. Flint • *Senior Graphic Designer:* Chris Glowacki • *Assoc. Editor:* Craig Ruegsegger • *Assistant Editors:* Joel A. Hess, Joseph E. Irwin • *Graphic Designer:* Vu Nguyen • *Graphic Intern:* Matt O'Gara

CIRCULATION
Subscriber Services Director: Sandy Baum • *New Business Circ. Mgr.:* Wayde Klingbeil • *Multi-media Promotions Manager:* Rick Junkins • *Promotions Analyst:* Patrick Walsh • *Renewal Mgr.:* Paige Rogers • *Billing & Collections Manager:* Rebecca Cunningham • *Circ. Marketing Analyst:* Kris Schlemmer • *Assoc. Circ. Marketing Analyst:* Paula M. DeMatteis • *Sr. Graphic Designers:* Mark Hayes, Robin Friend

CORPORATE SERVICES
VP of Finance: Mary R. Scheve • *Controller:* Robin K. Hutchinson • *Sr. Account.:* Laura J. Thomas • *Accts. Payable:* Mary J. Schultz • *Accts. Receivable:* Margo Petrus • *Production Dir.:* George Chmielarz • *Electronic Publishing Director:* Douglas M. Lidster • *System Administrator:* Cris Schwanebeck • *PC Maint. Tech.:* Robert D. Cook • *Pre-press Image Specialists:* Troy A. Clark, Minniette Johnson • *New Media Mgr.:* Gordon C. Gaippe • *Web Site Art Dir.:* Gene Pedersen • *Web Server Admin.:* Carol Schoeppler • *Web Content Mgrs.:* David Briggs, Sue M. Moe • *Web Designer:* Kara Blessing • *Professional Development Dir.:* Michal Sigel • *H.R. Asst.:* Kirsten Koele • *Receptionist:* Jeanne Johnson • *Mail Room/Delivery:* Lou Webber

WOODSMITH MAIL ORDER
Operations Director: Bob Baker • *Cust. Service Mgr.:* Jennie Enos • *Warehouse Supr.:* Nancy Johnson • *Buyer:* Linda Jones • *Tech. Service Rep.:* Johnny Audette • *Admin. Assist.:* Nancy Downey • *Cust. Serv. Team Leader:* Tammy Truckenbrod • *Sr. Cust. Serv. Reps.:* Anna Cox, April Revell, Deborah Rich • *Cust. Serv. Reps.:* Valerie Jo Riley, Kim Harlan • *Warehouse:* Sylvia Carey

WOODSMITH STORE
Mgr.: Dave Larson • *Asst. Manager:* Tim Thelen • *Sales Staff:* Wendell Stone, Jim Barnett, Larry Morrison, Mark Johnson, Gregory Kauzlarich • *Office Mgr.:* Vicki Edwards

Woodsmith® (ISSN 0164-4114) is published bimonthly (Feb., Apr., June, Aug., Oct., Dec.) by August Home Publishing Company, 2200 Grand, Des Moines, IA 50312.
Woodsmith® is a registered trademark of August Home Publishing.

Copyright© 2002 August Home Publishing Company. All rights reserved.

Subscriptions: Single copy: $4.95. One year subscription (6 issues), $24.95. (Canada/International add $10 per year, U.S. funds.)
Periodicals Postage Paid at Des Moines, IA and at additional offices. USPS/Perry-Judd's Heartland Division Automatable Poly.
Postmaster: Send change of address to *Woodsmith*, Box 37112, Boone, IA 50037-2112.
Subscription Questions? Write to *Woodsmith*, P.O. Box 842, Des Moines, IA 50304-9961 or call 1-800-333-5075, 8:00 am to 5:00 pm, Central Time, weekdays. Or send an email to: orders@woodsmith.com
Email: woodsmith@woodsmith.com
World Wide Web: http://www.woodsmith.com

Printed in U.S.A.

AUGUST HOME PUBLISHING COMPANY

SAWDUST

Several years ago I installed some low-voltage outdoor lighting around my house. I had visions of what a dramatic change outdoor lighting was going to make to my yard.

As it turned out, each lamp put out a rather pitiful amount of light. And as time went on, one or more of the lights always seemed to be out. All in all, I was disappointed. So I packed up the lights and forgot about them.

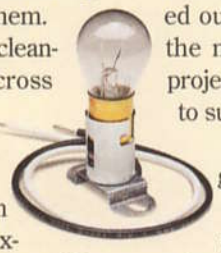

Then the other day, while cleaning out my garage, I ran across that box of lights. It got me to thinking about outdoor lighting again.

But this time, rather than buy new outdoor lighting fixtures, I wanted to see if it was possible to make a set that was easy-to-build, reliable, and bright.

From the start, we knew hardware was an important part in this project, so that's where we started.

The first step was getting the right power source. That turned out to be fairly easy. We found a low-voltage transformer and all the wiring at a local home center.

The next step was finding a bulb and socket. Sounded simple enough. But after a frustrating search through home centers, hardware stores, and catalogs, we just couldn't find anything that looked like it would work.

To be honest, I was just about to give up on the whole project when Chris Fitch, our project designer, came up with a unique solution from an unusual source, a company on the Internet that sold lighting supplies for trailers. They had just what we needed — a heavy-duty socket that held a common automotive-style bulb.

With the hardware problems sorted out, it was time to move on to the most interesting part of the project — building a wood fixture to surround the light.

As far as the construction goes, it's pretty straight-forward (just half-laps, dadoes, and grooves). The only tricky part is that the pieces are fairly small. And since you'll probably want more than one lantern, you'll be making several identical small pieces. So we've come up with a few techniques that let you cut these pieces quickly, accurately, and safely.

If you take a look at page 22, you can see the project we came up with. I think you'll agree it's a project that really shines — day and night.

Terry

Woodsmith Readers' Gallery

Visit other *Woodsmith* subscribers' workshops, and see photos of the projects they've built. It's all online in the new Readers' Gallery on the *Woodsmith* web site: **www.Woodsmith.com**

We want you to be part of the Readers' Gallery! To submit photos of your favorite *Woodsmith* projects or views of your shop, follow the instructions you'll find at the Reader's Gallery.

A LOOK INSIDE

CONTENTS

Features

Convertible Coffee Table 6

This beautiful table converts from a traditional coffee table to one that's at a comfortable height for dining or doing homework. The secret is a unique lift mechanism that's built into its base.

Outdoor Lanterns 18

Here's a DIY project that will really put your home (and your woodworking skills) in a good light. And it's easy to make a whole set with our tips for cutting multiple parts quickly and accurately.

Dadoes and Grooves 24

Cut a sloppy-fitting dado or groove? Never again. Here are the secrets and strategies for dead-on accuracy — regardless of whether you're working with solid wood or plywood.

Display Cabinet 28

Display your favorite collection or store your fine tools. Either way, this cabinet is a great solution. Plus, there are several options so you can make its design the perfect fit for your home.

Storing Hand Tools 34

Want to maximize every inch of your tool cabinet? Here's how we adapted the display cabinet for use in the shop, as well as some of the custom tool holders we came up with to hang the tools.

Departments

Tips & Techniques 4
Shop Notes 20
Sources 35

Coffee Table *page 6*

Outdoor Lanterns
page 18

Display Cabinet
page 28

TIPS & TECHNIQUES

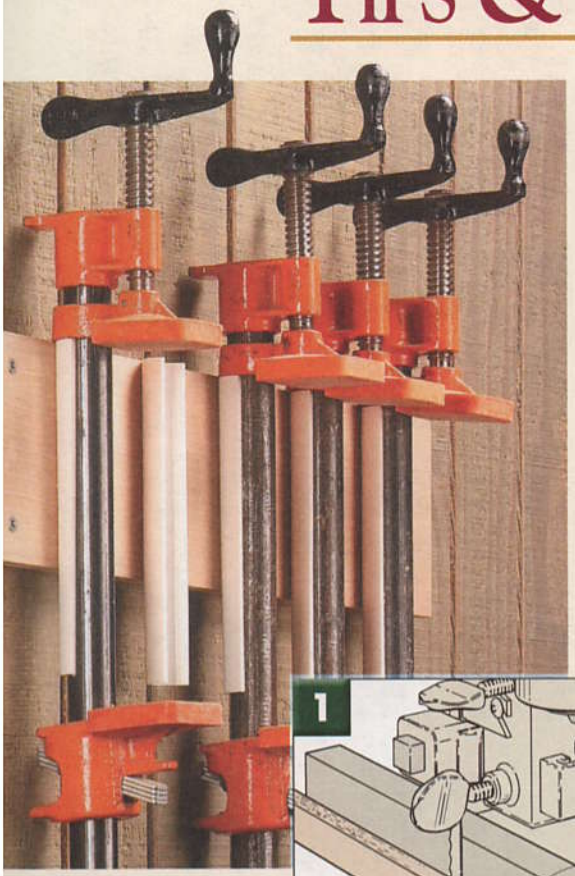

PVC Pipe Clamp Storage

After a recent plumbing project, I discovered a way to store pipe clamps — with PVC pipe. I discovered that if you cut a 1" pipe down the middle (a little off center), a ¾" pipe clamp will snap into the PVC pipe.

Inspired by this discovery, I decided to make an inexpensive pipe clamp rack, as shown in the photo. All I did was screw a series of PVC pipe halves to a board and then screw it to my shop wall, as you can see in Fig. 2.

CUTTING PVC. To cut the PVC pipe, I decided to use my band saw. And the only trick is keeping the round pipe from rotating as you cut it. But a quick, shop-made sled prevents this.

SLED. As you can see in Fig. 1, this plywood sled is a two-piece, T-shaped assembly that rides along the band saw's fence. To secure the PVC pipe to the sled, I just screwed it in place, as shown in Fig. 1a. (You can start off with an extra-long piece of PVC pipe and then cut it into short segments later.)

You'll want to sneak up on the final cut, testing the fit with a pipe clamp. If you cut the pipe exactly in half, it won't "grab" the clamp. On the other hand, if too much pipe is left, you'll really have to push to get the clamp in place. But it shouldn't take more than one or two passes before the pipe clamp "snaps" easily into the PVC pipe.

Michael Schillizzi
Lake Hopatong, NJ

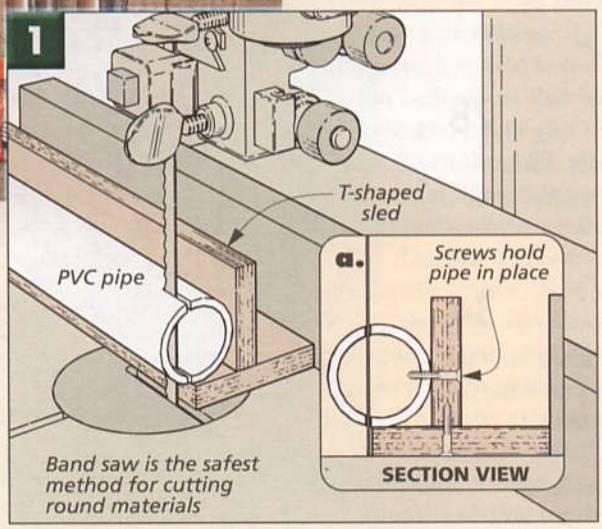

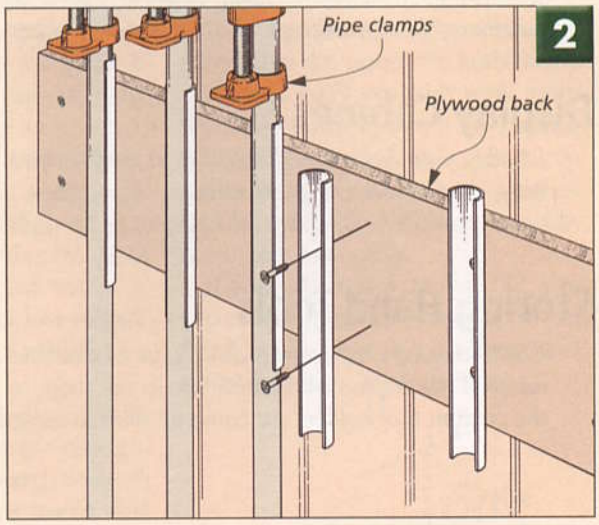

Name That Cord

My garage shop only has two outlets on the back of my bench. So I added a power strip to increase the number of usable outlets. But it seems like every power tool I own has a black power cord. This makes it hard to figure out which cord to unplug when there are a bunch of tools plugged in.

My solution was to simply label the cords using a small piece of masking tape and a magic marker. Now I can tell which cord belongs to what tool when I need to unplug it.

Kevin Hackson
Via the Internet

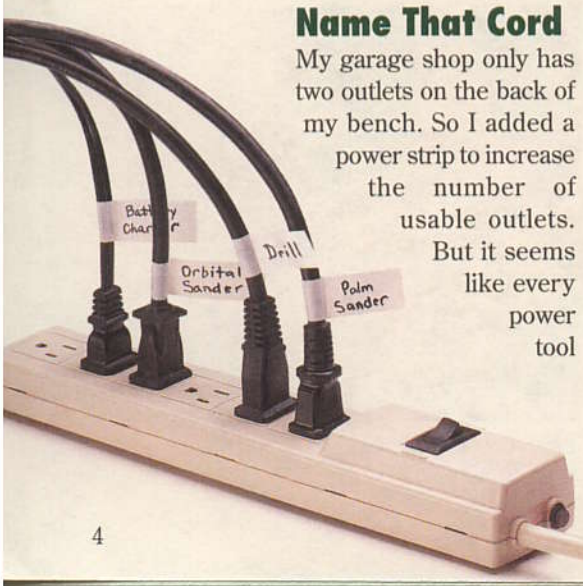

SUBMIT YOUR TIPS

If you have an original shop tip, we would like to hear from you and consider publishing your tip in one or more of our publications. Just write down your tip and mail it to: *Woodsmith,* Tips and Techniques, 2200 Grand Avenue, Des Moines, Iowa 50312. Please include your name, address, and daytime phone number in case we have any questions. If you would like, FAX it to us at 515-282-6741 or you can send us an email message at: woodsmith@woodsmith.com. We will pay up to $200 if we publish your tip.

Quicker Panels on the Table Saw

Instead of using an expensive, raised-panel router bit, I make coved raised panels at my table saw. I clamp a straightedge at an angle to the blade and then make a number of passes, as you can see in Fig. 2.

The key to doing this safely is to make sure you're removing only 1/16" with each pass. But this means you need to make a lot of passes to get the cove to the right depth. And if you have a lot of panels to cut a cove in, you can end up spending a lot of time at the table saw.

But there's a shortcut you can take to safely eliminate some of these passes. All you need to do is make a bevel cut on the table saw to remove as much of the waste as you can *before* starting the cove cuts, as you can see in Figs. 1 and 1a.

To do this, I first draw the profile of the cove on the end of the workpiece, as shown in Fig. 1a. Then I angle the blade and adjust my fence to remove as much waste as possible. (Be sure to leave the layout lines.) With the bevel cut, you can set up the saw to cut the cove, but a lot of the work has already been done.

Kris Feader
Saskatoon, Saskatchewan

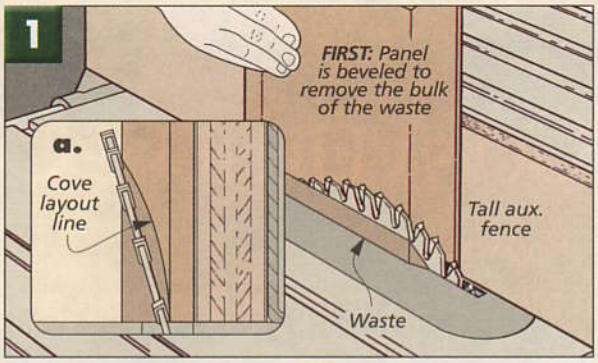

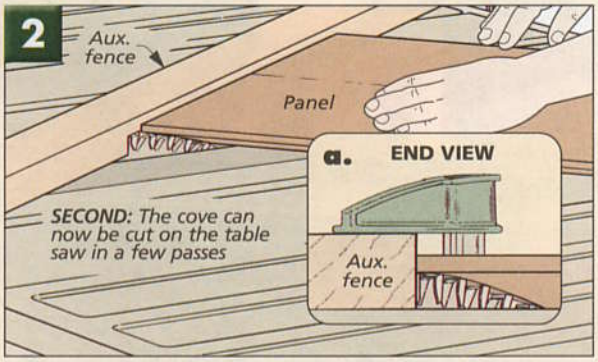

▲ *Shave some time off making raised panels on the table saw with this tip.*

Saw Blade Storage

I usually mail out my saw blades to be sharpened. But I always feared that the teeth could get chipped because of a shipping "mishap." So to prevent this from happening, I made a couple saw blade holders.

For a 10" saw blade, I started with a 12"-square piece of plywood. Then I used my hand-held router with a circle-cutting jig to make a recess (about 3/8" deep) for the blade to sit in. Note: If you don't have a circle-cutting jig, you can simply rout the recess freehand — it doesn't have to be a perfect circle.

Then to secure the blade to the holder, I use a fender washer and screw, as shown in the drawing.

Now I don't worry about chipped teeth.

Steve Bassindale
Oromocto, New Brunswick

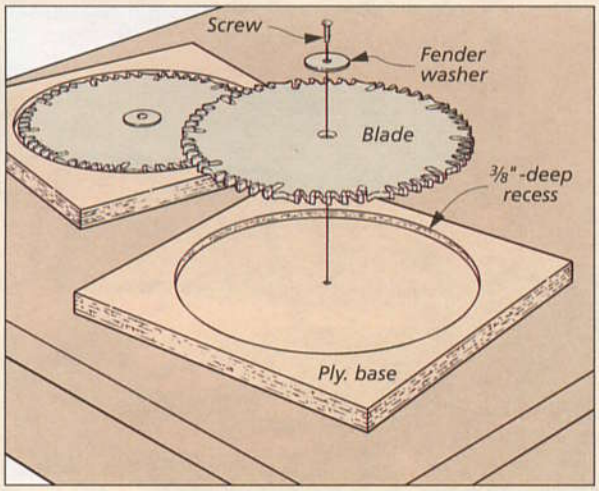

FREE
Online Tips

If you'd like even more woodworking tips, the solution is simple. Just visit us at our web site and sign up to receive a free tip via email every week.

www.woodsmith.com

Tap & Die Storage

Whenever I've needed to tap a hole, it seemed that the tap and drill bit were never together. Plus I had to think about what size drill bit to use for the tap.

But I fixed all that with this little holder. Now the drill bit, tap, and die are organized and in one spot.

Edward Everson
Sadus, New York

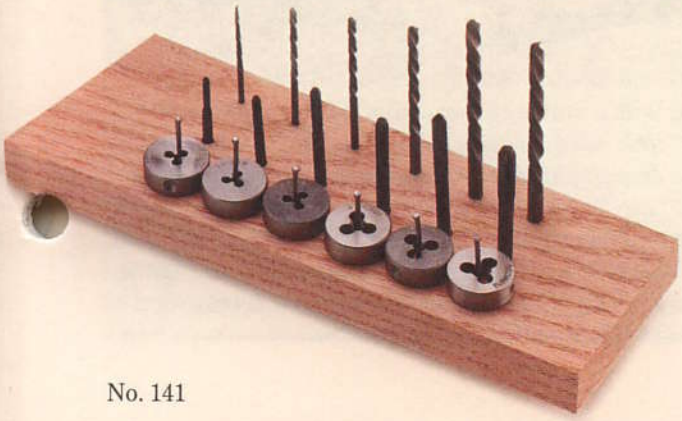

Laminate Liner

To make emptying my shop vacuum a little less of a mess, I wanted to line the canister with a plastic bag, as shown in the drawing at right. But as soon as I turned the vacuum on, the plastic bag would be sucked up into the filter.

As you can see, I solved this with a scrap piece of plastic laminate. It keeps the bag in place yet still slips out easily when the bag needs to be changed.

Chronis Stamatiadis
Andover, Massachusetts

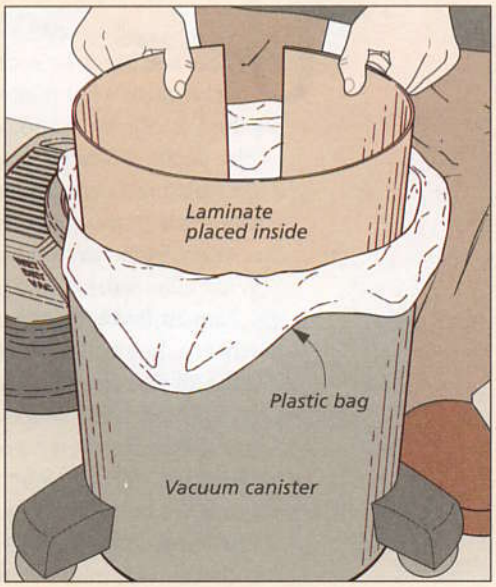

FEATURE PROJECT

CONVERTIBLE COFFEE TABLE

"Pop the top" of this elegant coffee table, and you'll find yourself with a table that's at a comfortable height for work, dining, or play.

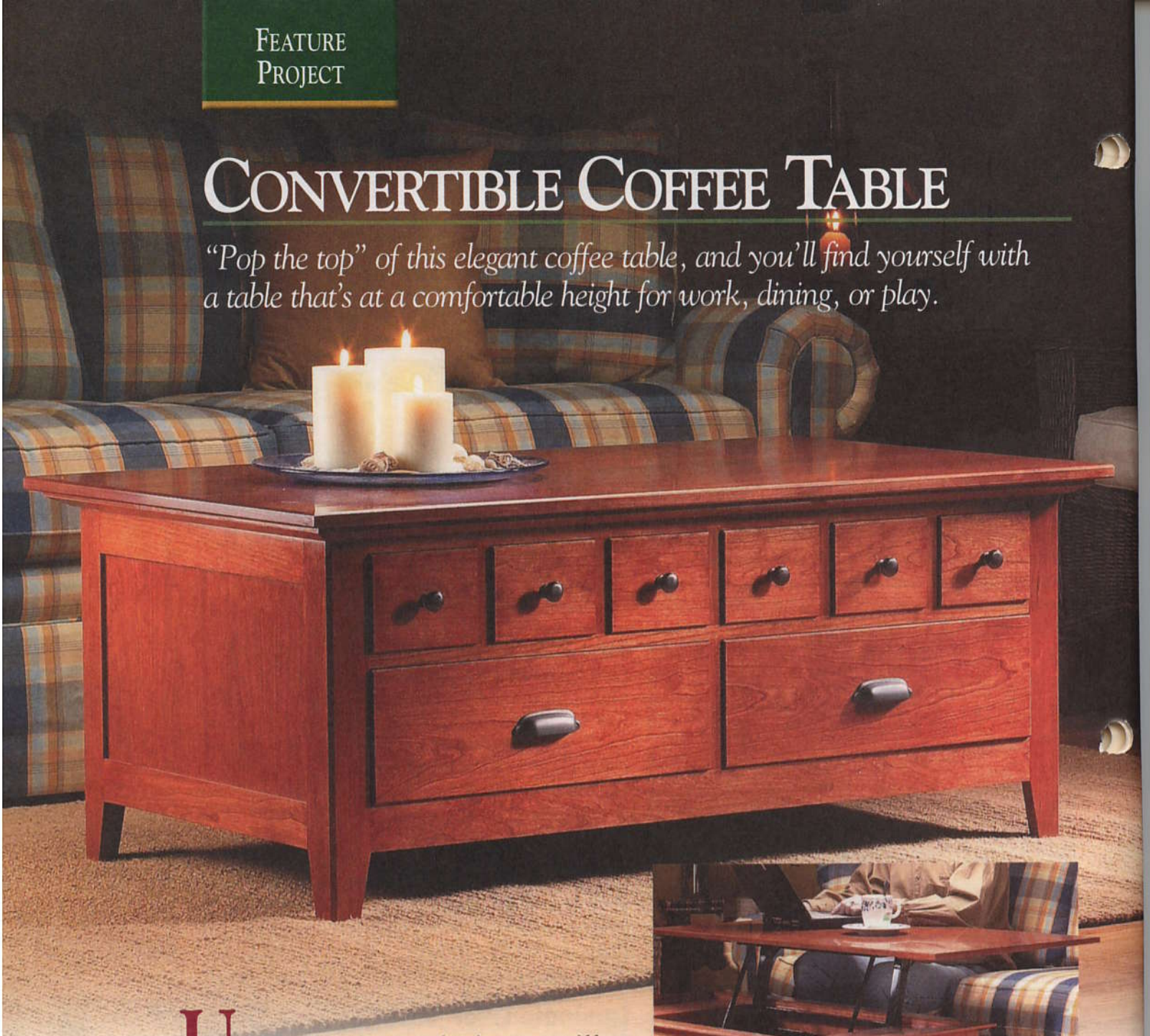

Unless you know its secret, there's no way you'd have a clue as to what makes this coffee table so unique. It's the top. Slip your hands under the top and gently lift — the panel will raise gracefully to nearly dining table height, as shown in the inset photo at right. So what starts out as an elegant coffee table converts into a handy table that's perfect for working, dining, or playing games.

What allows the top to change heights is a metal lift mechanism inside the base. It's a complicated piece of hardware, but you'll be surprised at how easy it is to install. All you need is a screwdriver and a handful of screws. (Mail order sources are listed on page 35.)

And I haven't even mentioned the storage yet. This coffee table also has four deep drawers: two generous ones on the bottom and two smaller ones on either side of the lift mechanism. Plus if you're not interested in the convertible top, take a look at page 14 where we show the option of building this coffee table with a hinged lid. (No lifting hardware, but even more storage.) Either way, it's a great-looking project that's straightforward to build (more on that on page 8).

▲ *With a unique lift mechanism, the top panel on this table will raise easily to "working" height. Plus, four drawers provide plenty of room for storage.*

Construction Details

OVERALL DIMENSIONS:
48"W x 27"D x 19"H (Lowered)

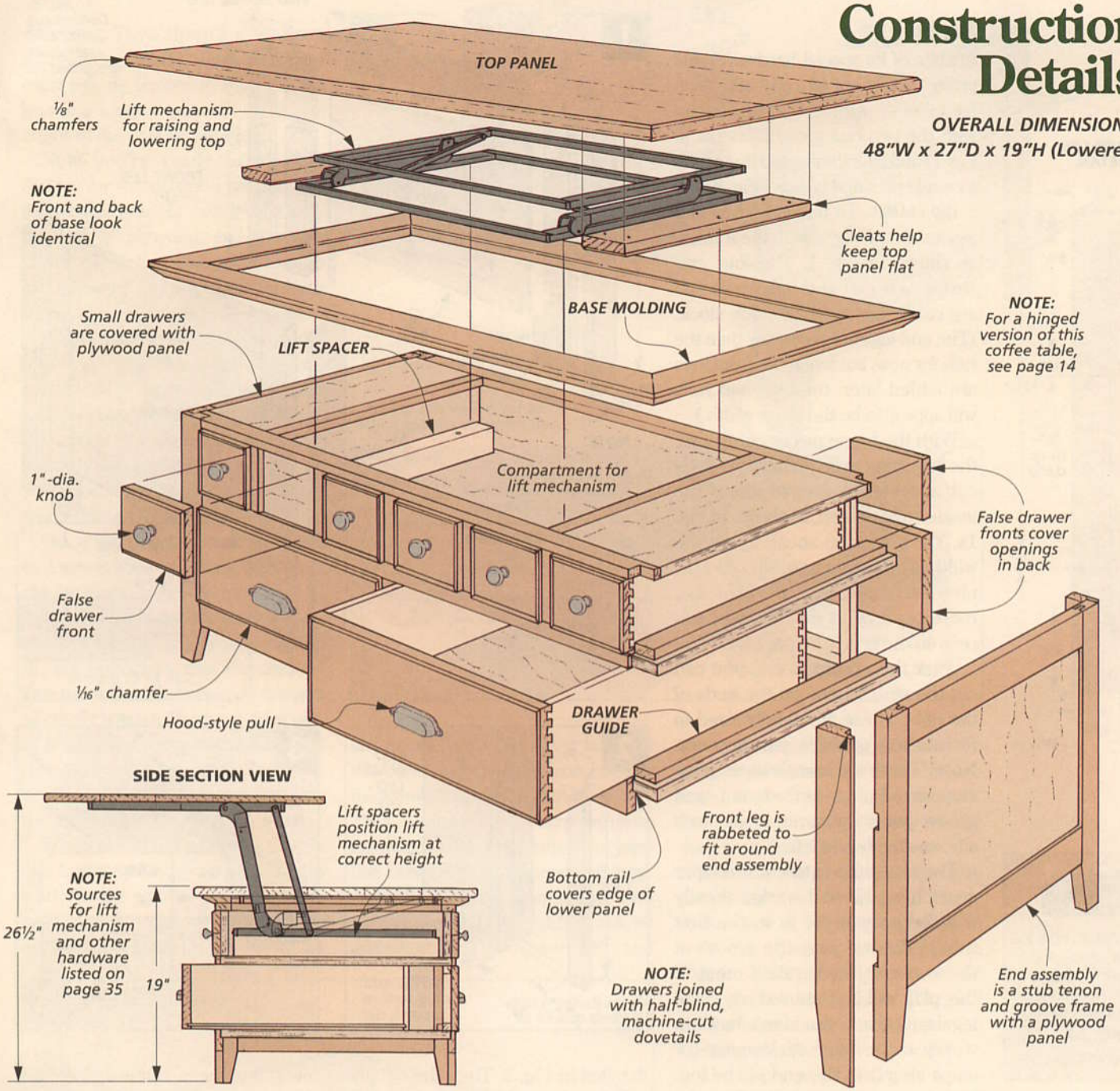

MATERIALS & SUPPLIES

A	End Frame Legs (4)	3/4 x 1 7/8 - 17 1/2	**M**	Cover Edging (2)	3/4 x 3/4 - 20	**Y**	Lg. Dwr. Btms. (2)	1/4 ply. - 18 7/8 x 20 3/4
B	End Frame Rails (4)	3/4 x 2 1/8 - 19 1/2	**N**	Drawer Guides (4)	3/4 x 1 3/8 - 21 1/2	**Z**	Drawer Stops (4)	3/4 x 1/2 - 5
C	End Panels (2)	1/4 ply. - 19 1/2 x 10 7/8	**O**	Base Molding	3/4 x 2 3/4 - 13 In. ft.	**AA**	Lift Spacers (2)	1 1/2 x 2 - 19 1/2
D	Front Legs (4)	3/4 x 2 1/8 - 17 1/2	**P**	Edging	3/4 x 1/2 - 12 In. ft.	**BB**	Top Panel (1)	3/4 x 27 - 48
E	Upper Panel (1)	3/4 ply. - 22 x 43	**Q**	False Front Cleats	3/4 x 3/4 - 12 In. ft.	**CC**	Top Panel Cleats (2)	3/4 x 3 1/4 - 19
F	Lower Panel (1)	3/4 ply. - 22 x 43	**R**	Sm. Drawer Fronts (12)	3/4 x 4 3/8 - 5 7/8			
G	Lower Divider (1)	3/4 ply. - 6 3/4 x 22	**S**	Sm. Drawer Backs (2)	1/2 x 4 3/8 - 5 7/8			
H	Upper Dividers (2)	3/4 ply. - 4 3/4 x 22	**T**	Sm. Drawer Sides (4)	1/2 x 4 3/8 - 20 7/8			
I	Fr./Bk. Panels (2)	3/4 ply. - 4 1/2 x 26 1/4	**U**	Sm. Dwr. Btms. (2)	1/4 ply. - 5 3/8 x 20 3/4			
J	Top Rails (2)	3/4 x 1 1/2 - 42 1/2	**V**	Lg. Drawer Fronts (4)	3/4 x 6 1/8 - 19 3/8			
K	Bottom Rails (2)	3/4 x 2 1/8 - 39 3/4	**W**	Lg. Drawer Backs (2)	1/2 x 6 1/8 - 19 3/8			
L	Sm. Dwr. Covers (2)	3/4 ply. - 7 5/8 x 20	**X**	Lg. Drawer Sides (4)	1/2 x 6 1/8 - 20 7/8			

- (12) #8 x 1 1/4" Fh Woodscrews
- (4) #8 x 2 1/2" Fh Woodscrews
- (1) Pop-Up Table Lift Mechanism
- (1) Nylon Glide Tape (30 ft.)
- (12) 1"-dia. Knobs w/Machine Screws
- (4) 3 1/4" Hood-Style Pulls w/Screws

Base

In spite of its special hardware, this project starts out like any other coffee table — with the base. I began with the two end assemblies (as in Fig. 1) and later connected them with a couple plywood panels (Fig. 8).

END FRAMES. To build the two end assemblies, I began with the frames, as shown in Fig. 1. The four *end frame legs (A)* and four *rails (B)* are cut to size from ¾"-thick stock. (The end legs are narrower than the rails for now, but when the front legs are added later, the legs and rails will appear to be the same width.)

With the frame pieces cut to size, the first thing to do to these pieces is cut a centered groove along the inside edge of each, as shown in Fig. 1a. You'll want to sneak up on the width of this groove so it'll hold a ¼" plywood panel, and if you'd like more on how to do this, you can refer to the article on page 24.

After the groove is cut, you can cut the stub tenons on the ends of the rails. These are simply sized to fit into the grooves you just cut. Note: There's a complete, step-by-step article on stub tenon and groove joinery featured on our web site, see the box at left.

The next step is to cut the taper on each leg. Since this edge already has the groove cut in it, the first thing I did was plug the groove at the bottom. But because most of this plug will be removed when the leg is tapered, you don't have to worry if the plug sticks past (or stops short) of the end of the leg. What's important is that it lines up with a mark 3⅛" from the end of the leg, as you can see in Fig. 2.

With the plug glued in place, you can lay out and cut the tapers, as detailed in Fig. 2. Then the ¼" plywood *end panels (C)* can be cut to fit inside the frame, and the end assemblies can be glued together.

FRONT LEGS. There are still some dadoes to cut across the end assemblies, but these same dadoes will also be cut in the *front legs (D)*, so I worked on them first (Fig. 1).

The first thing to do is taper the bottom of the legs just like you did with the end legs (Fig. 2 and margin

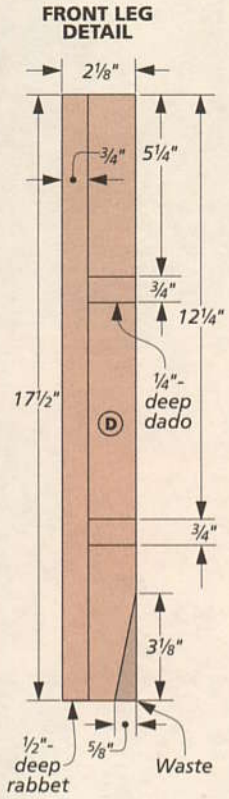

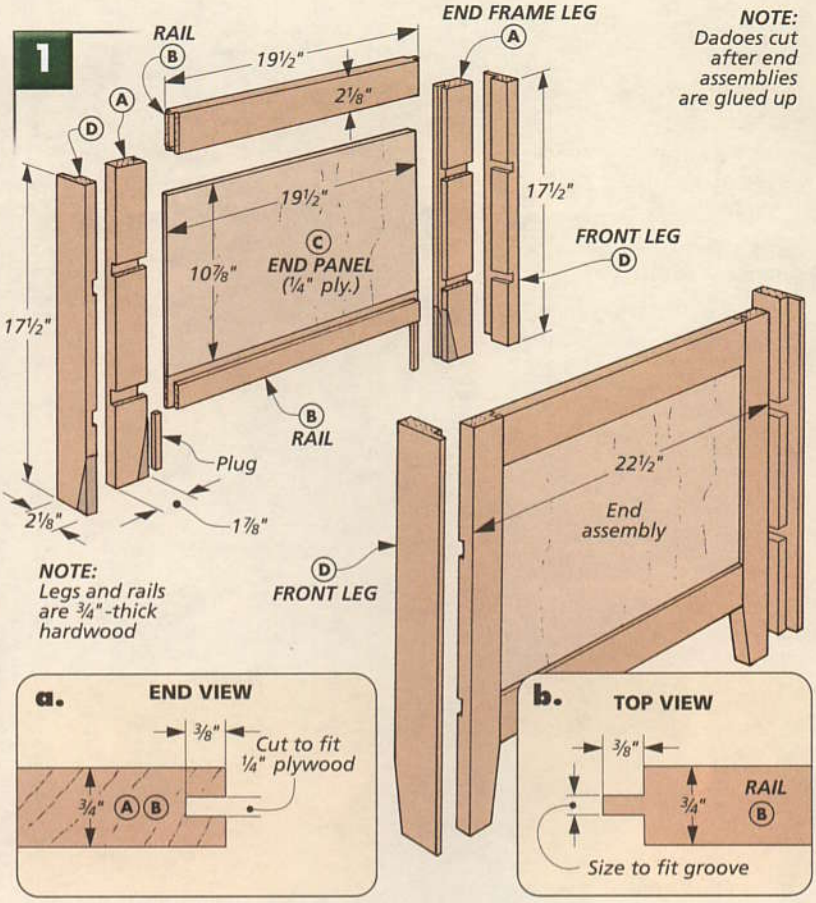

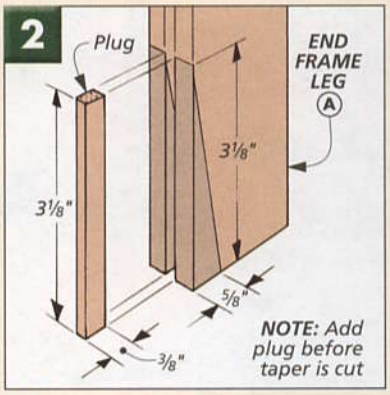

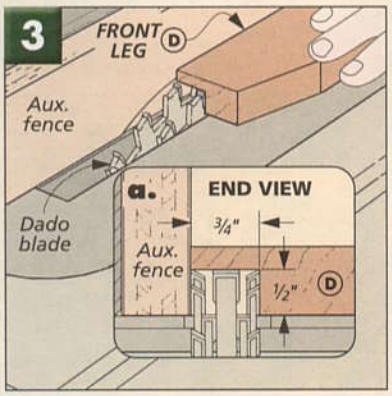

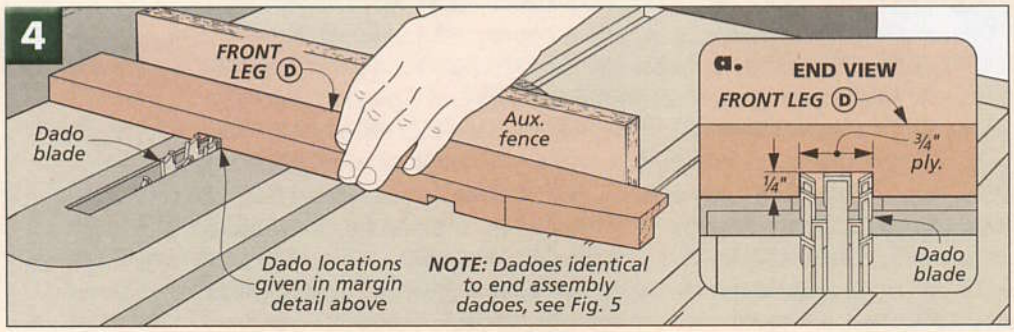

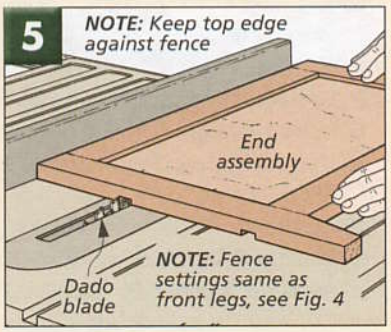

Woodsmith GO ON-LINE EXTRAS

Like more on how to build a stub tenon and groove frame? You can download a step-by-step article at our web site:

www.woodsmith.com

drawing). Then there's a ½"-deep rabbet to cut on the *outside* edge of each leg, as shown in Fig. 3. This leaves a tongue that will cover the edges of the end assemblies.

Now you're ready to cut the dadoes for the plywood panels. The dado blade is set to match the thickness of ¾" plywood, and to make sure the dadoes align, you'll want to use the same fence settings for both the front legs and end assemblies.

When cutting the dadoes on the front legs (Fig. 4 and left margin), you'll need to use the auxiliary miter gauge fence to support the piece. But as you can see in Fig. 5, the end assemblies are large enough so you'll be able to use just the rip fence (like a rip cut).

Once the dadoes are cut on the end assemblies and front legs, they can be glued together, as shown in Fig. 6. But in order for the two panels to fit without any problems (Fig. 8), it's important that the dadoes line up and each corner is formed perfectly square. Fortunately, a pair of temporary spacers takes care of this. (Miter the corners of the spacers so they won't end up glued into the assemblies.)

When the glue has dried, there's one last step before you can begin work on the panels. I used a handheld router to chamfer the outside corners of each end assembly, as shown in Fig. 7. The idea is to set the bit so the chamfer matches the thickness of the tongue (Fig. 7a). This softens the sharp outside corners and helps "hide" the joint line between the front and end legs.

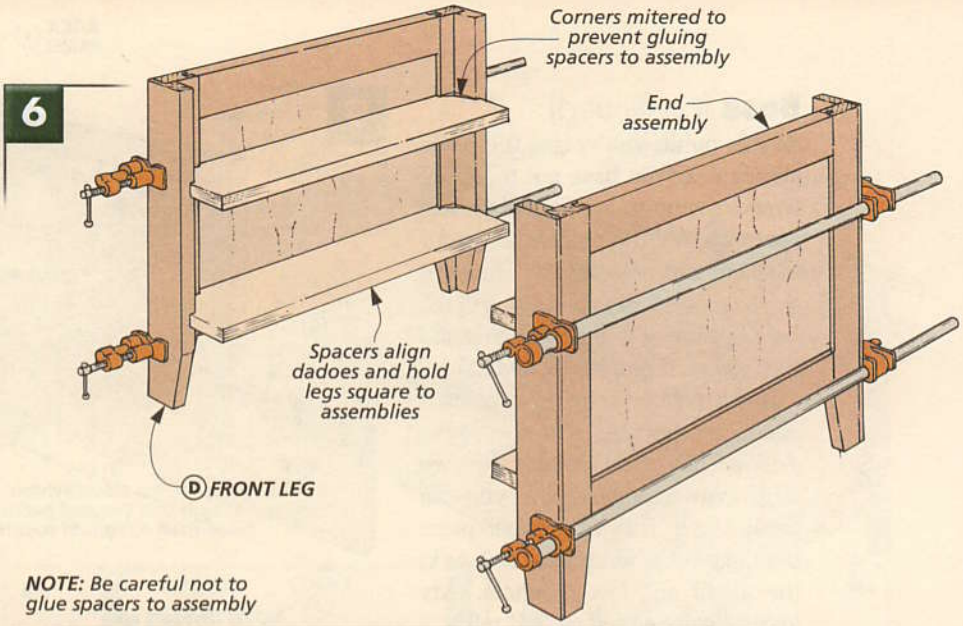

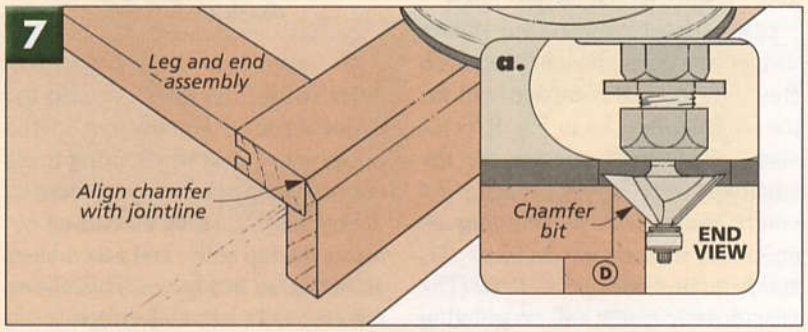

PANELS. The two panels that connect these end assemblies can be added now. The *upper (E)* and *lower panels (F)* both start out cut to the exact same size from ¾" plywood, as you can see in Fig. 8 below. Just make sure they'll fit into the dadoes in the end assemblies.

The only thing to do to these panels is to cut a few dadoes. These dadoes are all ¼" deep and sized to hold ¾" plywood, as indicated in Fig. 8a. Both panels get a centered dado on their inside faces. (This will hold a lower divider that creates the openings for the large drawers.)

The upper panel also gets a couple of dadoes cut in its upper face. These will position and support the compartment that's created for the lift mechanism later.

BASE ASSEMBLY. All that's left now is to assemble the two panels between the end assemblies. Since the dadoes in the end assemblies automatically position the panels, all you have to worry about is pulling everything tight. To do this, I used band clamps. But you'll also want to make sure the legs on either side of each end assembly are pulled tight to the panels, and you may have to add a couple of clamps here to help.

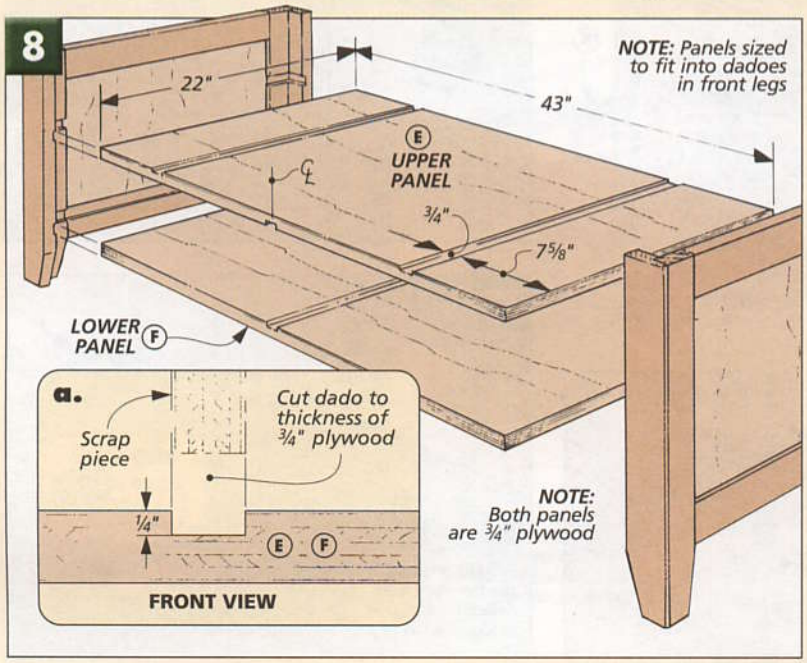

Base (continued)

At this point, you've got the basic structure of the base put together. Now it's time to create the drawer openings and the compartment for the lift mechanism (Fig. 9). Then you can begin cleaning up the look of the base by adding different edging and trim pieces (Figs. 10, 13, and 15).

LOWER DIVIDER. The first piece I added to the base was the *lower divider (G)* that creates the two large drawer openings, as you can see in Fig. 9. This ¾" plywood piece is simply cut to fit into the dadoes in the upper and lower panels. (My lower divider ended up 6¾" tall.)

COMPARTMENT. After the lower divider has been glued in place, you can work on the compartment for the lift hardware, as in Fig. 9. (This also creates the openings for the small drawers on the sides.) All you're doing here is building an open box with *upper dividers (H)* and *front* and *back panels (I)*. (The false drawer fronts will be glued to the front and back panels.)

The dividers and panels aren't all the same height. The upper dividers are ¼" taller (wider) so they'll fit into the dadoes you've already cut in the upper panel. And when sizing these compartment pieces, you want to make sure that they all end up ¾" *below* the top of the end assemblies, as indicated in Fig. 9a. This allows for a top rail that's added next.

The dividers and panels just butt together, so when they've been cut to size, they can be glued to the upper panel and to each other.

TOP & BOTTOM RAIL. With the lift compartment built, it's time to dress up the base. I started with the *top (J)* and *bottom rails (K)*, as shown in Fig. 10. Even though these ¾"-thick pieces form the top and bottom of the drawer openings, they're sized and oriented differently. When sizing the top rails, they should fit between the rails on the end assemblies (42½"). And the bottom rails fit between the front legs (39¾").

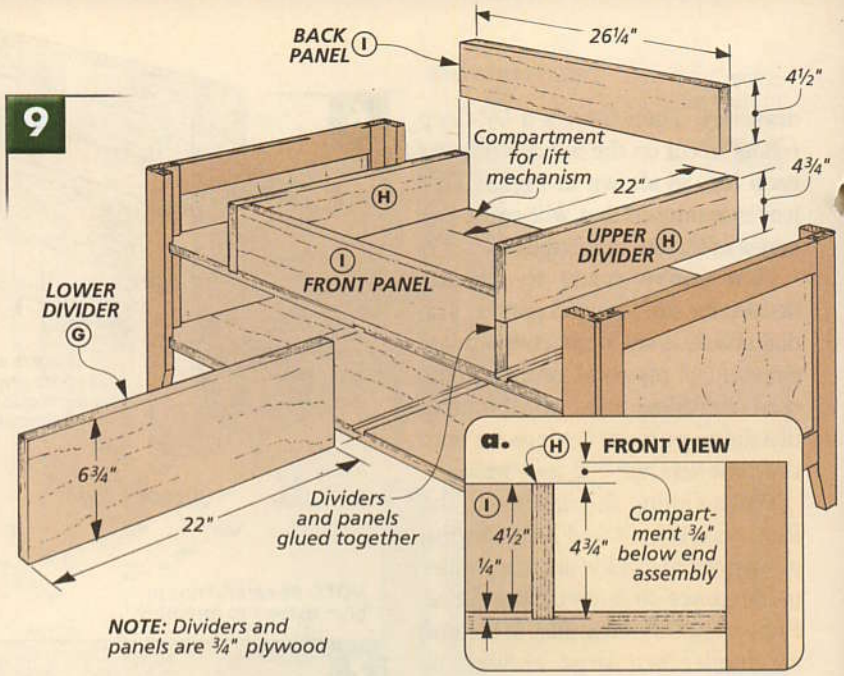

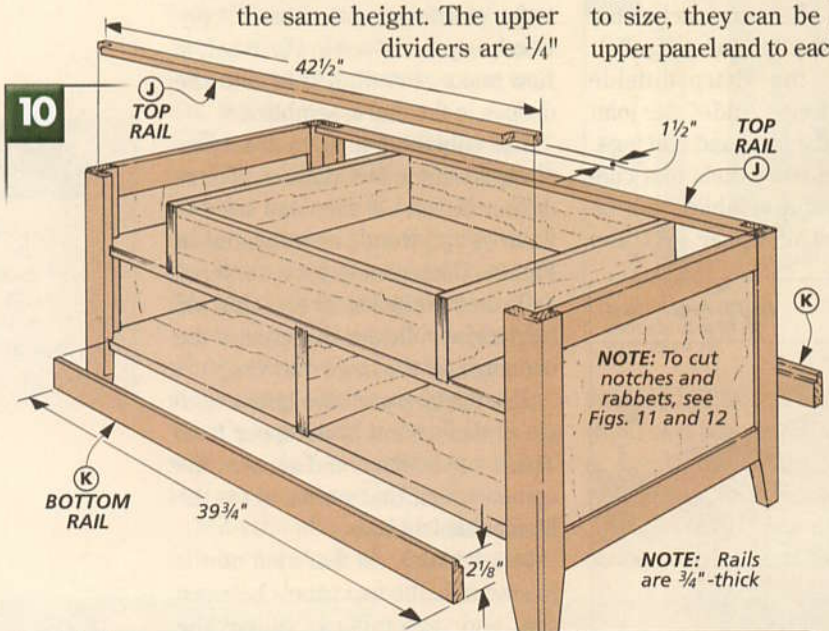

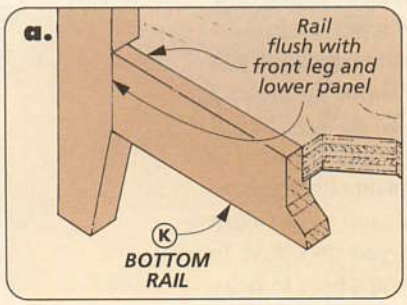

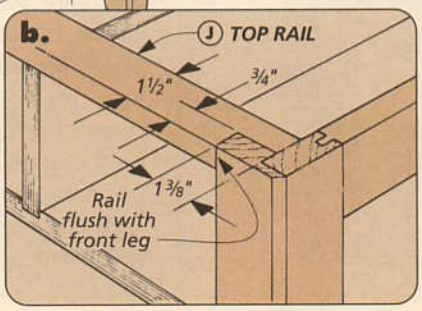

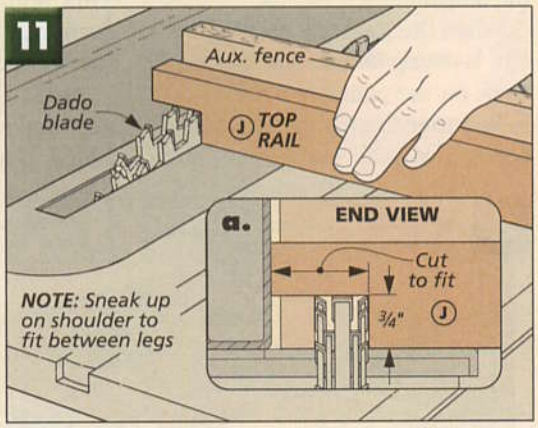

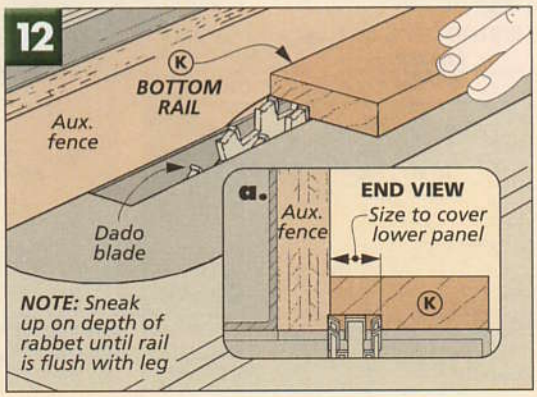

It's important that both rails end up flush with the front legs (Figs. 10a and 10b). For each top rail, I had to cut notches on the ends, as shown in Fig. 11. Sneak up on the width of the notch first by adjusting the rip fence. The goal is to get the rail to fit between the front legs. When you have a good fit, sneak up on the height of the blade until the rail is flush with the faces of the legs.

Each bottom rail is rabbeted so it will wrap around the lower panel, as in Fig. 12. Here the dado blade is buried in an auxiliary fence, and again, I snuck up on the width of the rabbet first. Once the rail covered the plywood edging, I raised the blade until the rail was flush with the faces of the front legs.

When all the top and bottom rails fit like they should, you can go ahead and glue them to the base.

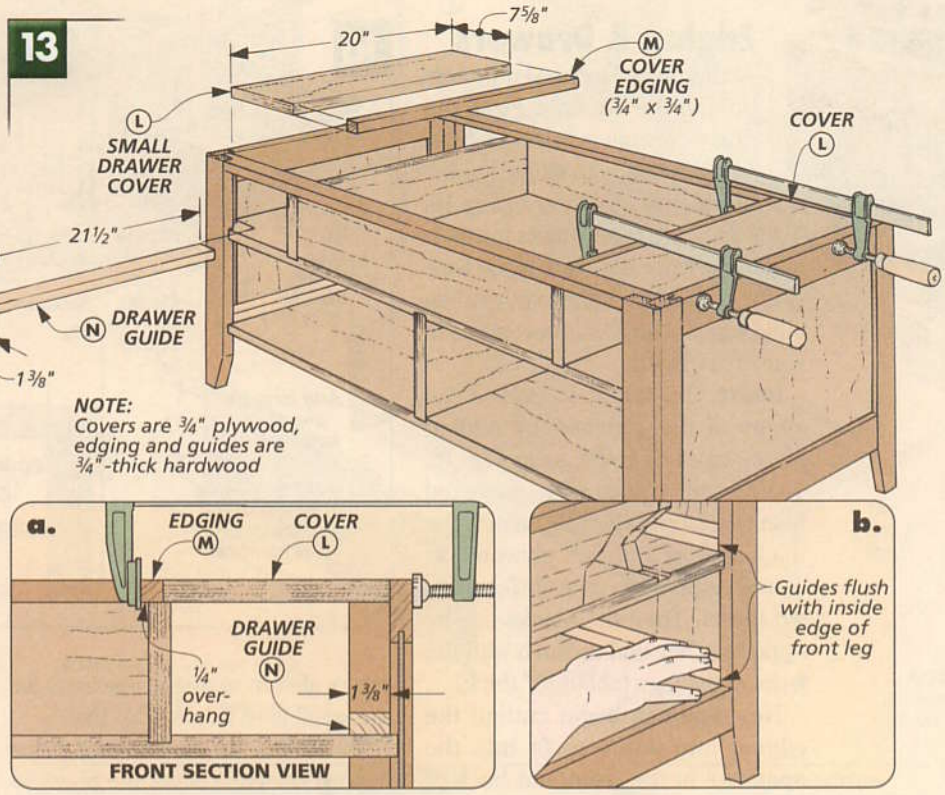

DRAWER COVERS. Next, I added a cover to the top of the small drawer openings beside the lift compartment. (You won't want to be able to see inside these drawers each time the top panel is lifted.) To do this, I made two oversized ¾"-plywood *small drawer covers (L)* with *edging (M)* glued to one edge, as in Fig. 13. And when cutting them to size, notice that they don't end up flush with the upper dividers — I allowed for a ¼" overhang (Fig. 13a).

GUIDES. Before gluing the covers in place, I added four *drawer guides (N)* to the inside of the base, as you can see in Fig. 13. These guides are ripped so they're flush with the edges of the front legs, as in Fig. 13a and 13b. (Later, you'll add nylon glide strips to center the drawers.)

BASE MOLDING. After gluing the guides and the small drawer covers in place, I added some ¾"-thick *base molding (O)*, as shown in Fig. 15. This molding starts out as extra-long blanks that are beveled on two edges: a 27° bevel on the lower outside edge and a ¼" chamfer on the upper, inside edge to remove the sharp corner. I made both of these cuts on the table saw, as you can see in Fig. 14. (But the chamfer could just as easily be routed.)

The molding is mitered so that when it's glued in place, it will overhang the base 1¼", as in Fig. 15a.

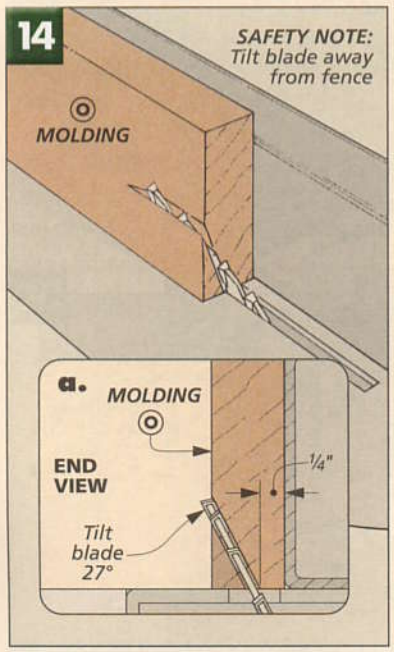

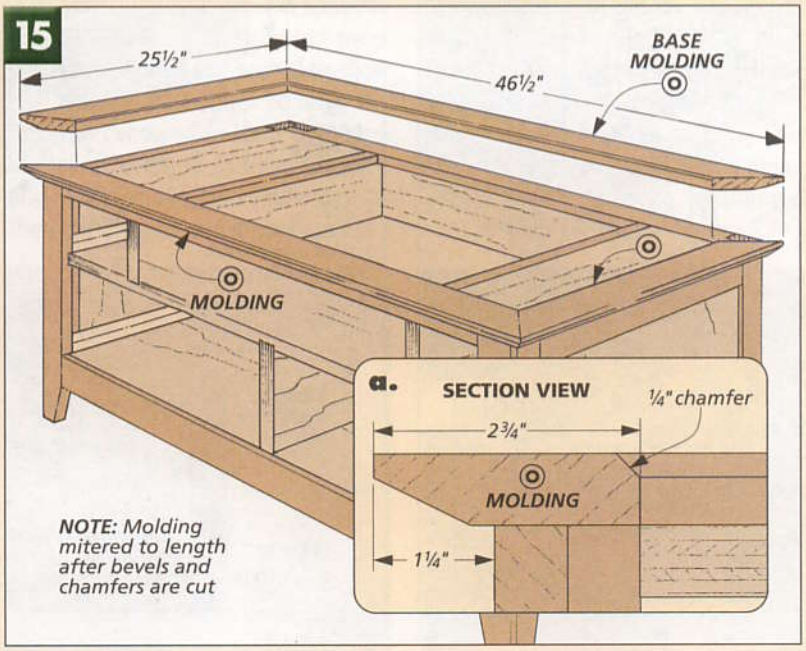

Edging & Drawers

At this point, I focused my attention on the drawers. First, the drawer openings in the base are "dressed up" with strips of solid-wood edging, as shown in Fig. 16. Then there are false drawer fronts to add to the front and back of the base (Figs. 17 and 18). And finally, you can build and fit the four drawers, as in shown in Fig. 19.

EDGING. To begin, I covered the edges of the plywood by adding pieces of *edging (P)*, as in Fig. 16. You'll want to start with oversized blanks, planing them to match the thickness of the 3/4" plywood as closely as possible (usually *less* than 3/4" thick). Then the blanks can be ripped so they end up flush with the faces of the legs (about 1/2" thick).

Now you can begin cutting the edging into strips to fit into the openings in the front and back of the case (Fig. 16). I started with the long, horizontal strip that covers the upper panel. Clamping these strips isn't a problem. With no back, the clamps will reach through the openings. But work carefully here so the strips align with the plywood edges.

After the long strip is added, you can add the short vertical strips. With the short strips on top, you aren't just covering the edging — you're also creating the openings for the small false fronts (Fig. 16a).

To do this, the two edging strips nearest the ends cover the plywood edges of the upper dividers, as in Fig. 16a. (These can be clamped, but the others will need to be held in place until the glue sets.) The center strip lines up with the edging on the lower divider below it. And the remaining two pieces are centered between these edging strips.

CLEATS FOR FALSE FRONTS. With the edging strips in place, you can begin work on the false fronts (Fig. 18). These are really just extra drawer fronts that cover the four small "openings" in front of the base and *all* the openings in back (though up to now the front and back of the base have been identical).

But before you can cut the fronts to size, the first step is to add some cleats to the drawer openings in *back* of the base, as you can see in Fig. 17. These cleats simply form a mounting frame you can attach the false fronts to (Fig. 17b).

To do this, I cut 3/4" x 3/4" *false front cleats (Q)* to fit in the drawer

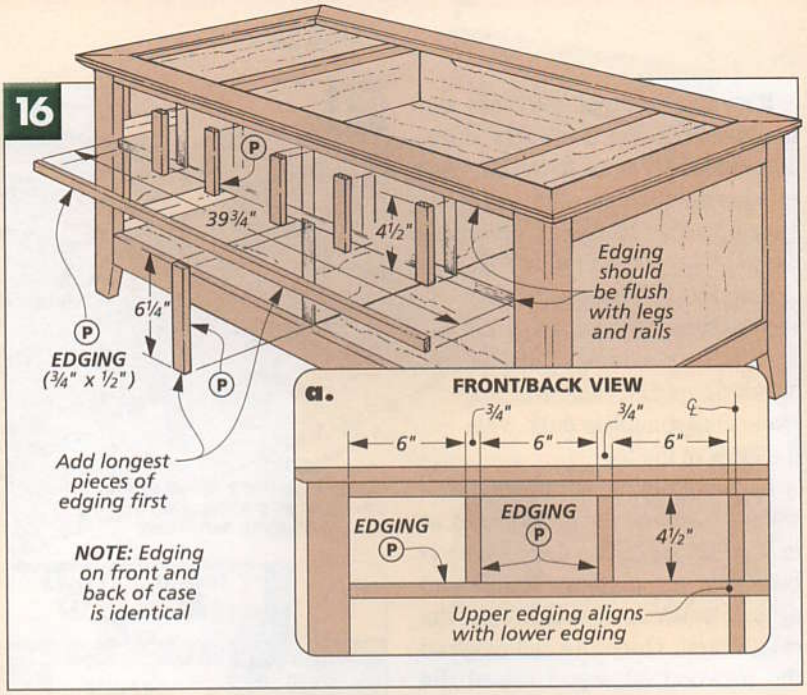

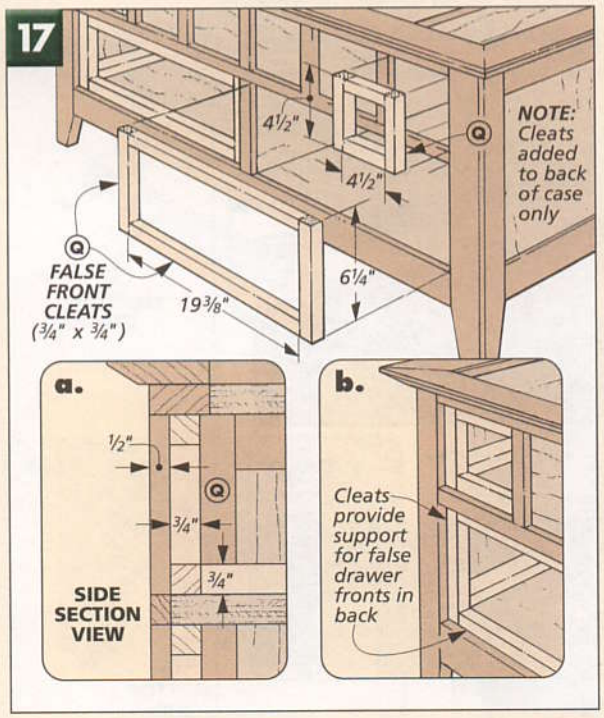

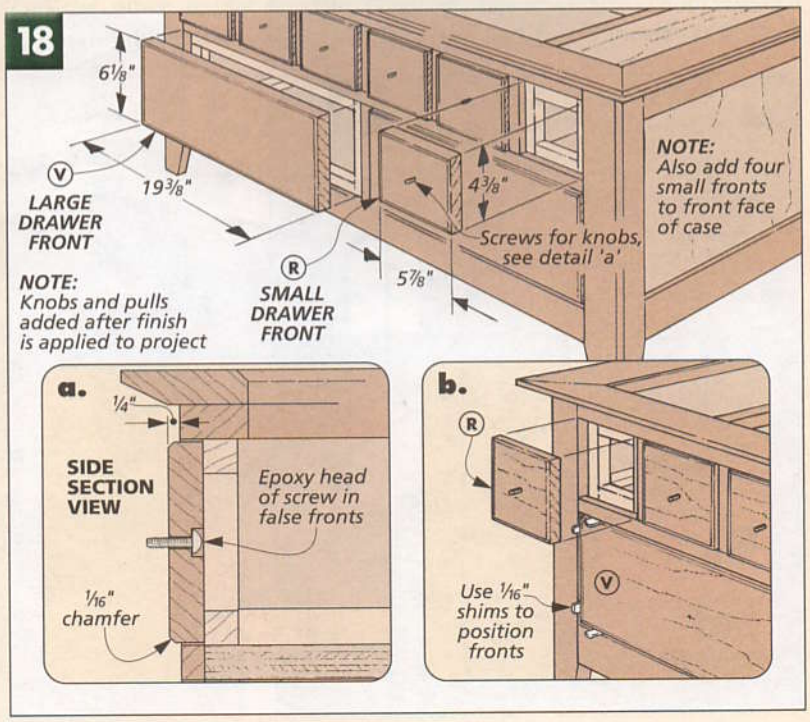

openings in back of the base. And when gluing them in place, the important thing is that they consistently set back ½" (Fig. 17a).

FALSE FRONTS. Now all the false fronts can be cut to fit into their openings, as shown in Fig. 18. But as I already mentioned, the false fronts are identical to the drawer fronts, so I simply cut twelve *small drawer fronts (R)* and four *large fronts (V)* to fit in the openings in the base with a 1/16" gap on each side. (Even though the openings should all be identical, it's a good idea to measure each one just to be safe.)

Before you can glue the false fronts into place, there are a couple of things to do to them. First, I routed a chamfer around the face of each, as indicated in Fig. 18a.

Next, I added the machine screws that will hold the knobs on the small drawer false fronts. This meant drilling counterbored mounting holes and epoxying the screws in place (Fig. 18a). Note: Because these screws are in counterbores, they may need to be cut down so the knobs will fit tight.

DRAWERS. With the false fronts in place, you can begin to build the drawers, as shown in Fig. 19. The fronts have already been cut to size, so I made the ½"-thick maple *backs (S, W)* and *sides (T, X)* next.

To join these pieces, I used my router and a half-blind dovetail jig. (There's more on this on our web site, as described in the box at right.) Then after routing the dovetails, I cut a groove for the ¼" plywood *bottoms (U, Y)*, as in Fig. 19b. Finally, I chamfered the front faces (Fig. 19a) and glued the drawers together. But it's best to wait on the knobs and pulls until after the finish is applied.

GLIDE STRIPS. As I've already mentioned, the fronts were sized to allow 1/16" gaps on each side. To keep the drawers centered in their openings and allow them to slide smoothly, I added strips of nylon glide tape to the openings, as shown in Fig. 20.

STOPS. The drawers are designed to stand proud of the base ¼", as in Fig. 19c. So I intentionally built them short and then added *drawer stops (Z)* to the back of the base, as you can see in Figs. 19 and 19c. This way, the stops can be sized to make sure the fronts were positioned exactly where I wanted them.

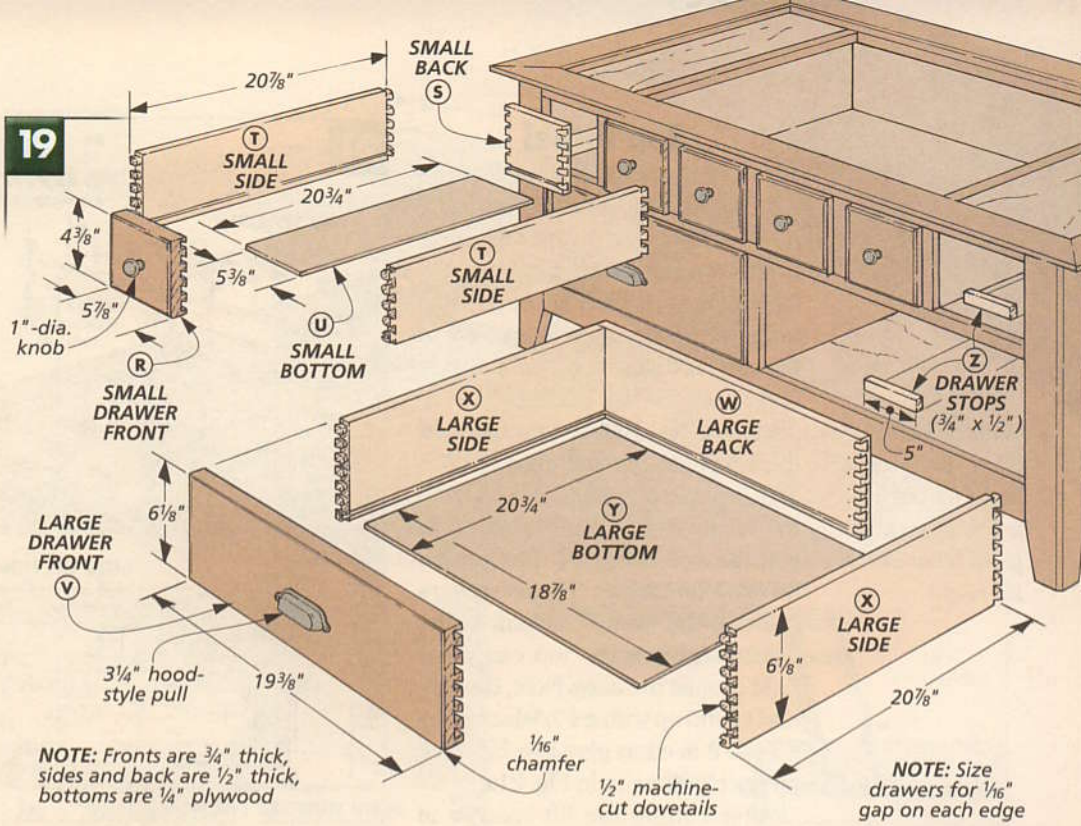

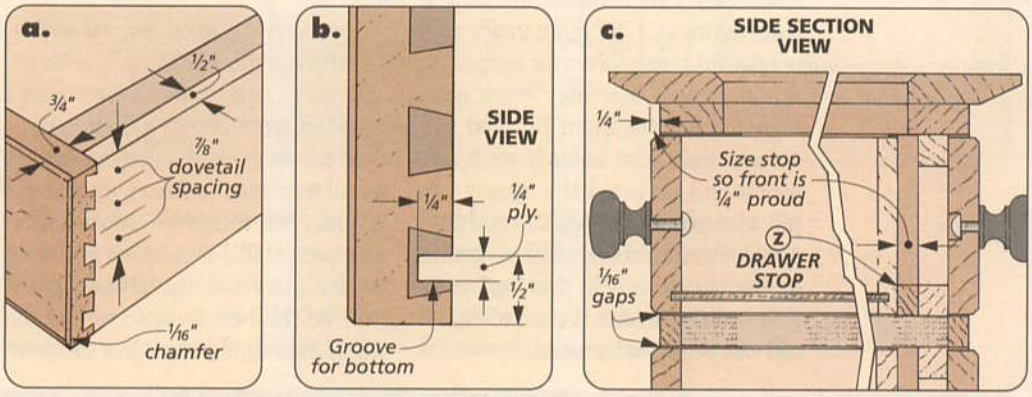

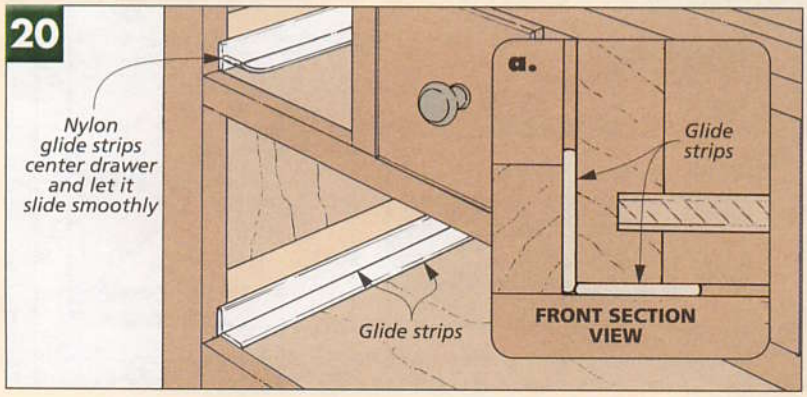

Woodsmith GO ON-LINE EXTRAS

All it takes to build professional-looking drawers quickly is a common half-blind dovetail router jig and a few pointers. All this information is currently available to be downloaded on our web site:

www.woodsmith.com

▲ *With very little effort, the springs in the lift mechanism raise the top panel up to working height.*

Top Panel

All that's left to complete the coffee table is to add a top panel and a lift mechanism. Of course, this project wouldn't look any different if the top didn't lift. Plus, you'd have even more space for storage in the compartment. (For more on this option, see the box below.)

LIFT SPACERS. Before you can add the top panel, the first thing to do is add a couple of *lift spacers (AA)* to the inside of the compartment, as you can see in Fig. 21. The reason for this is simple. These spacers position the lift mechanism at the right height so the top can close tight against the base. Note, though, that to end up with a 1½"-thick spacer, you'll need to glue two ¾"-thick pieces together, as in Fig. 21a.

After cutting the lift spacers to size, they can be installed in the compartment. I set mine inside and set the lift mechanism on top just to double-check that they were positioned correctly. Then I drilled two countersunk pilot holes in each and glued and screwed the spacers in place, as shown in Figs. 21a and 21b. Since the lift mechanism is spring loaded to remain in the "up" position, I didn't install it until after the top was ready to be added.

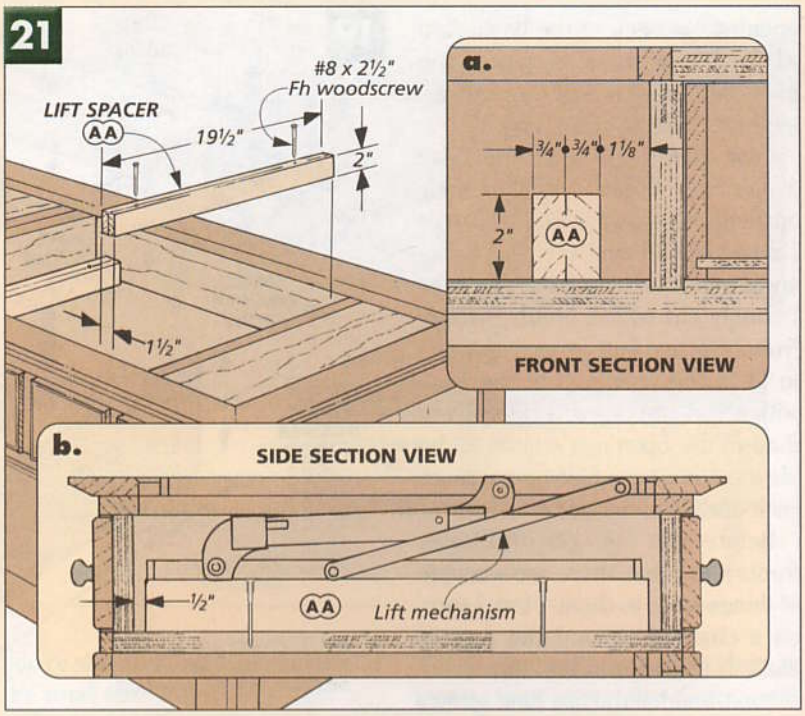

TOP PANEL. As you can see in Fig. 22, the *top panel (BB)* is a large, ¾"-thick, solid-wood panel that I glued up from five 6"-wide boards.

At this stage in the project, there's a real tendency to hurry up and get it done. But this is the most noticeable part of this project, so you want to take extra care that it looks good. Shuffle the boards around and flip them over until you've got the best-looking panel. Then you can glue it together and sand or plane it flat.

Note: With a large panel, I sometimes use splines or biscuits to help keep the boards aligned — especially if one doesn't want to lay flat. But this is up to you. The important thing is to end up with a flat panel.

TOP PANEL CLEATS. Of course, a solid-wood panel is going to expand and contract, and one this large is bound

HINGED LID OPTION

Converting the coffee table to the hinged version shown here is really no trouble. Instead of a lift mechanism (and spacers), you'll need no-mortise hinges and a length of chain, as in the drawing.

To mount the hinges, I screwed them to the base and then set the top in place. When the top is centered, you can mark the position of the hinges. Also, you'll want to cut the chain to length so the top leans back about 10°.

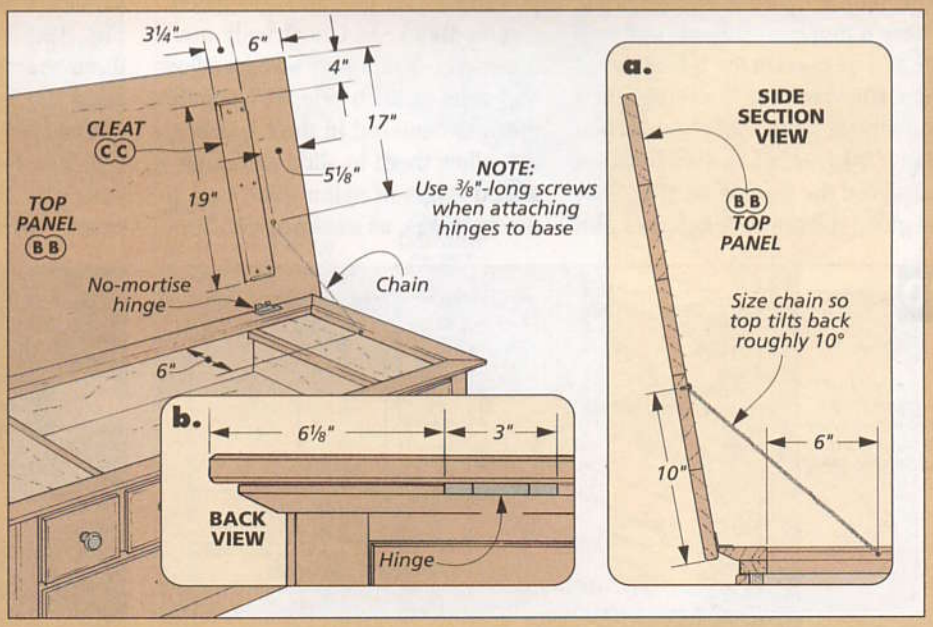

to cup a little. So I designed the top to have two 3/4"-thick *cleats (CC)* to hold it flat, as in Fig. 22.

Because of the amount of clearance inside the base, the cleats are oriented with their faces (not their edges) against the panel. But before I could add the cleats, the panel cupped, so I had to modify the cleats to pull the panel flat. But more on that on page 16.

FINISH. When the cleats have been added and the panel is flat, all the parts of the table are complete. So it's a good time to apply a finish. I'd recommend several coats of a varnish or polyurethane for protection. And it's a good idea to apply one or two coats on the bottom face of the top panel so the two faces are more likely to expand and contract at the same rate (and keep the panel flat).

INSTALLING LIFT MECHANISM. Now it's time to mount the lift mechanism and top panel to the base. First, the mechanism is screwed to the base. (I oriented the mechanism to open the same "direction" as the drawers.) Then the top can be set on the mechanism. You'll want to do some careful measuring here to make sure the panel is centered. When it is, you can mark the pilot hole locations and screw the top in place.

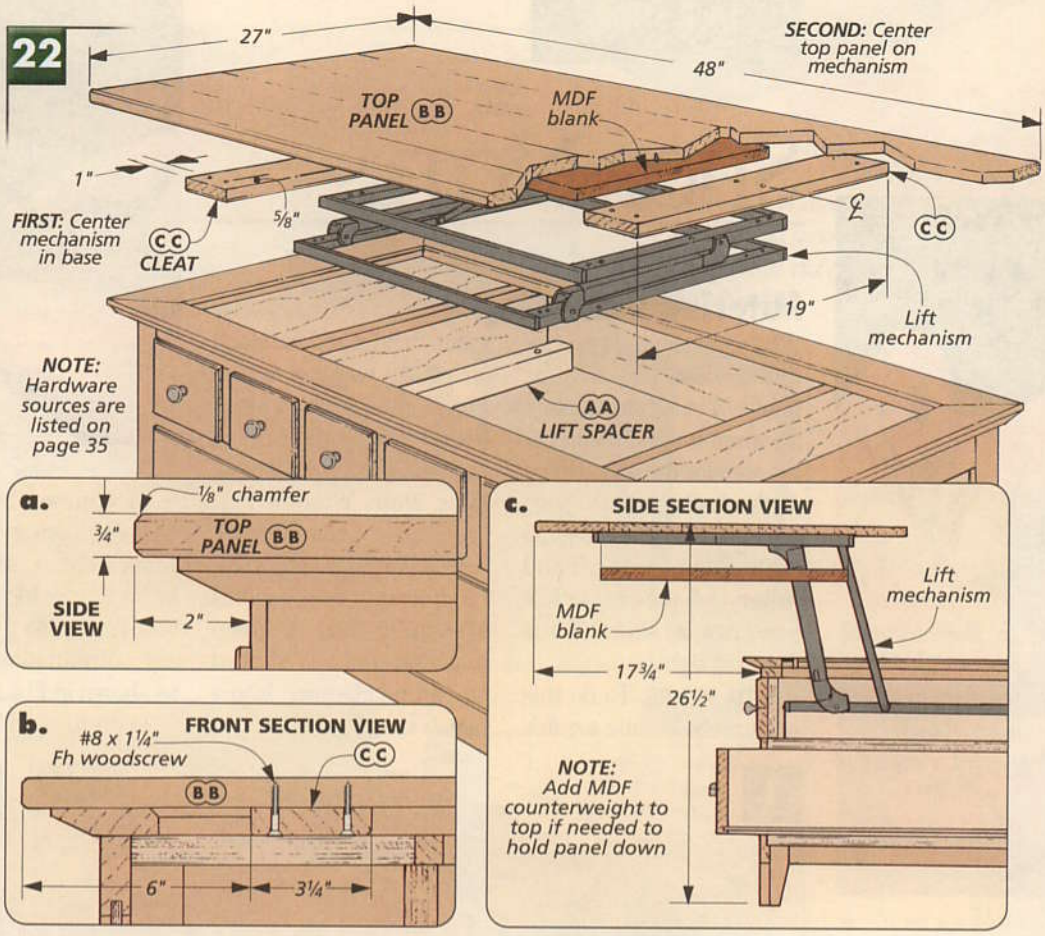

Finally, you'll want to close the top panel to make sure it stays shut. Mine wanted to lift back off the base an inch or so. To solve this, I simply screwed a scrap piece of MDF to the underside of the panel (inside the "frame" of the lift mechanism), as shown in Fig. 22c. And this added weight seemed to do the trick — the lid closed tight against the base. W

CUTTING DIAGRAM

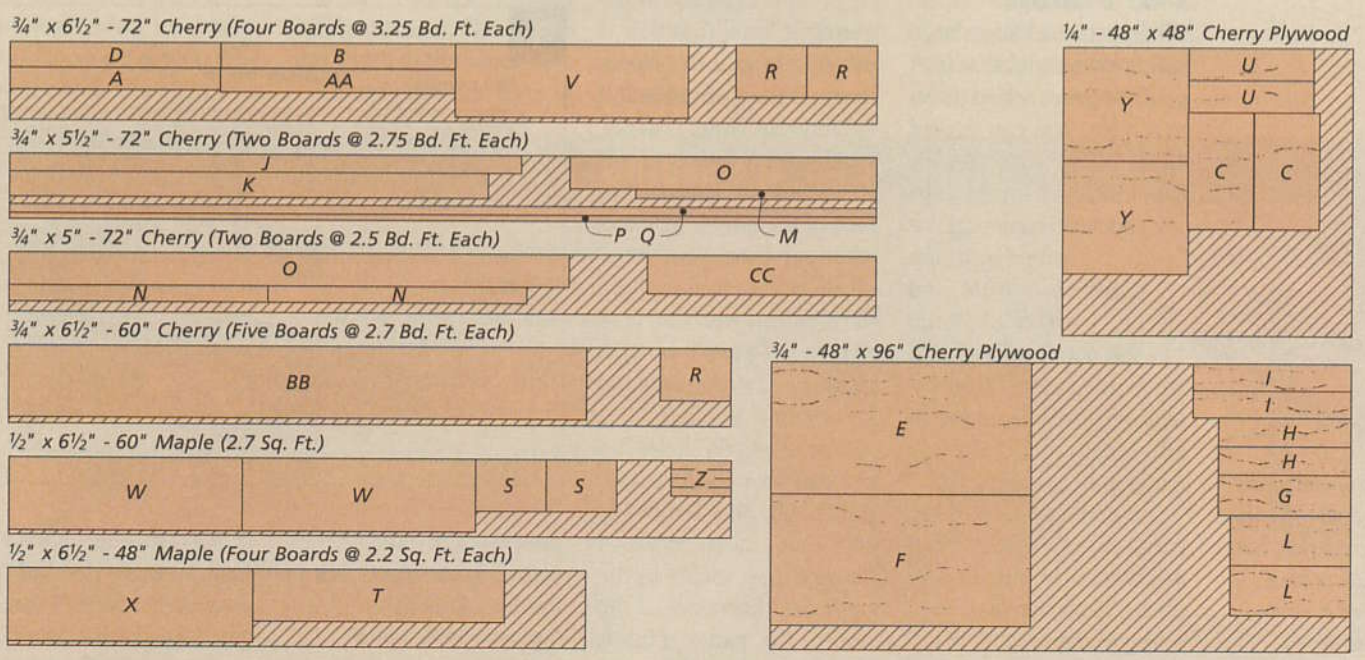

SHOP NOTES

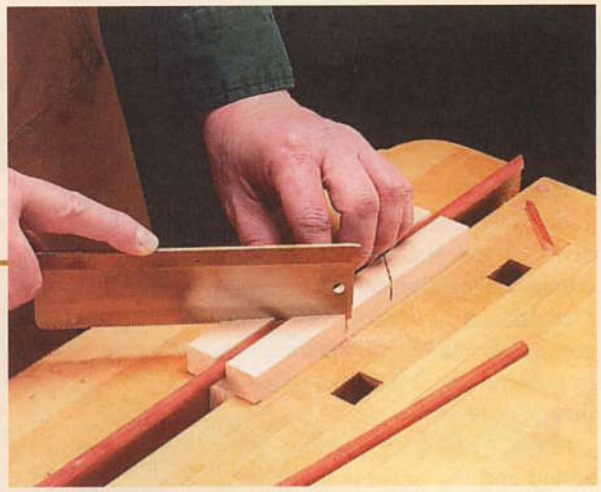

▲ *To allow my hand saw to slide smoothly in this miter "box," I applied a little wax to each face.*

Mitering Glass Stop

When mitering glass stop, the trick is to work with the fragile ¼" x ¼" strips safely. So when it was time to cut the stop for the glass doors on the display cabinet (page 28), I decided to leave my table saw turned off and miter the pieces with a hand saw, as shown in the photo at right.

MITER BOX JIG. To do this accurately, I made a quick miter "box" sized for small strips. As you can see in Fig. 1, this is just a piece with a groove cut in it to hold the glass stop blanks. (The stops shouldn't fit the groove tight, or you'll have a hard time adjusting them from side-to-side.) This miter "box" is glued to a cleat so the T-shaped jig can be clamped into a bench vise.

Of course the critical part of making this jig is accurately cutting the kerfs that guide the hand saw. And to do this, I used my combination square, as shown in Fig. 2.

Then to hold the small strips in place, I gripped them with my fingers. But I found that the saw tended to bind in the kerf. So for a quick solution, I rubbed a little wax on the blade, as in the margin photo at left. W

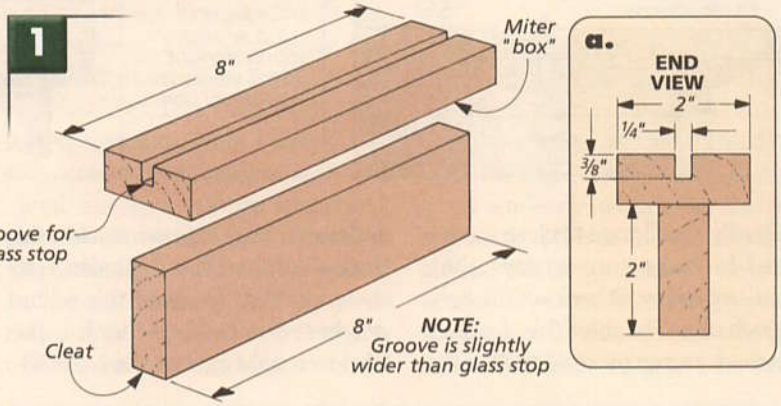

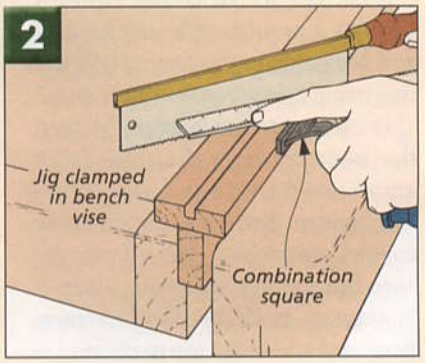

Flat Panels

When you're adding a large solid-wood panel that isn't going to get screwed down to a base, you can expect some problems. The air inside isn't going to change its moisture content at the same rate as the air outside, and before too long, the panel will cup. So when designing the coffee table on page 6, I planned to add cleats under the top panel to help keep it flat.

Unfortunately, my top panel cupped *before* I had a chance to attach the cleats. However, instead of going to the trouble of ripping the panel apart and gluing it back together, I decided to add the cleats to see if they would pull it flat anyway. Note: Usually, when adding cleats, I'll set their *edges* against the face of the panel, which is stronger than the "face" cleats shown in the photo at right. But with this project, there wasn't enough clearance for the cleats to be oriented on edge.

The cleats did help, but the panel was still cupped noticeably. So I decided to try one more trick. I "bowed" the cleats in the opposite direction as the cup in the panel. This is just a matter of shaving a little off each end and then screwing the cleat back to the panel, as in the drawing and detail above.

The "bowed" cleats did the trick. The panel still isn't perfectly flat, but you wouldn't notice it unless you placed a straightedge on the panel. W

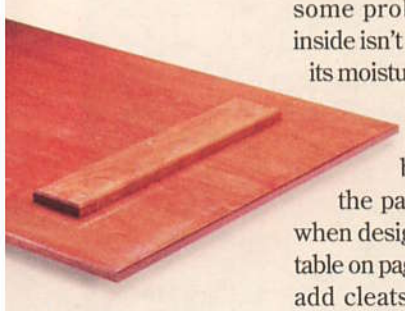

▲ *Solid-wood cleats help hold the coffee table top flat, but the cleats here needed a little adjustment to work properly.*

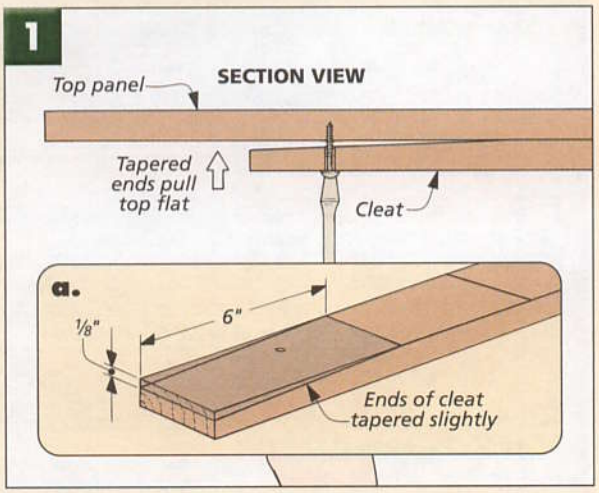

Bridle Joint

The display cabinet on page 28 has door frames with grooves on their inside edges to hold a panel. As you can see in the upper photo at right, a bridle joint (or open mortise and tenon) is a good choice for this type of frame. It's plenty strong to hold a glass panel, and the whole process can be done on the table saw. All you need is the simple jig shown in the box below. (You'll want to build the jig *before* you get started.)

GROOVE. The first step to building the frames is to make a centered groove on each piece, as in Fig. 1. Technically, this isn't part of the joint, but you'll use this same fence setting to cut the mortise next.

To cut the groove, I made a couple passes over a regular blade. Flipping the pieces between passes automatically centers the groove. And you'll want to sneak up on the position of the fence until the grooves are ¼" wide.

MORTISE. Now you can cut the mortises in the stile pieces, as in Fig. 2. You don't want to change the fence for this step. The mortises should align with the grooves. But you will need to raise the blade to set the depth of the mortises, as indicated in the lower margin photo. This way, the mortise's depth will automatically match the width of the tenon.

Cutting the mortises is the same two-step process you used when cutting the grooves. Only this time, the workpieces will be cut standing on end (supported by the jig).

TENON. All that's left now is to cut a tenon to fit the mortise. As you can see in Fig. 3, I laid the rails down for this step, making multiple passes over a dado blade. Set the fence so the tenon matches the width of the stiles. Then sneak up on the height of the blade until the tenon fits snug in the mortise.

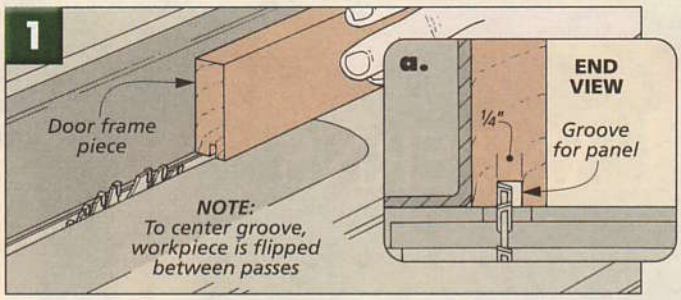

▲ *Unlike a traditional mortise and tenon, a bridle joint can be cut completely on the table saw.*

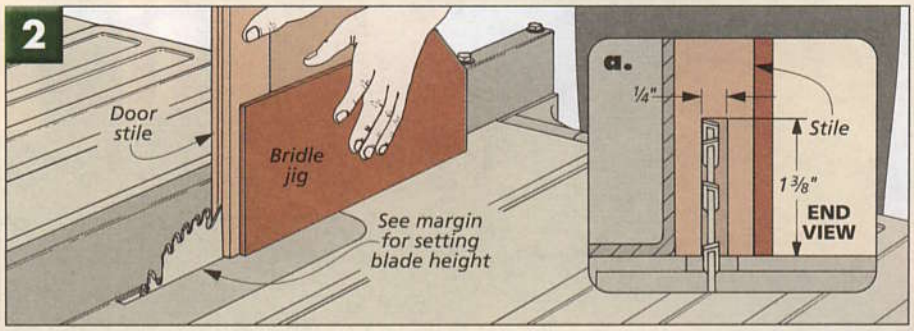

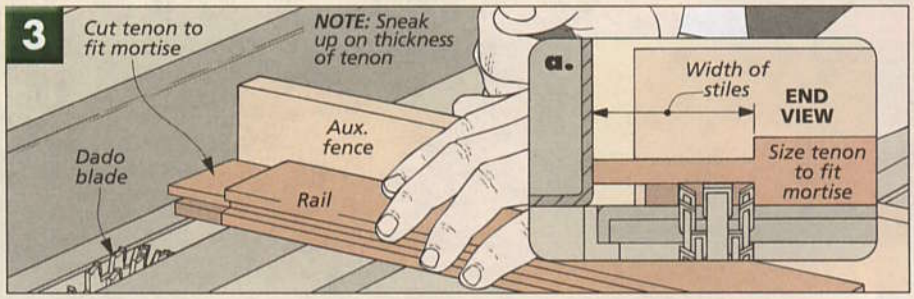

▲ *To set the blade at the right height for the mortise of the bridle joint, raise it until it aligns with the groove in one of the rail pieces.*

BRIDLE JIG

▲ *This push block lets you cut the mortises without having to reset the fence.*

I needed a simple push block to support the stiles while the mortises were being cut. Plus, I wanted to use the same fence setting as the groove setup so the mortises would align with the grooves. This push block does the trick. Its body matches the stile's thickness (¾"), and the hardboard arm extends past the front of the body to prevent the piece from tipping as it's pushed across the blade.

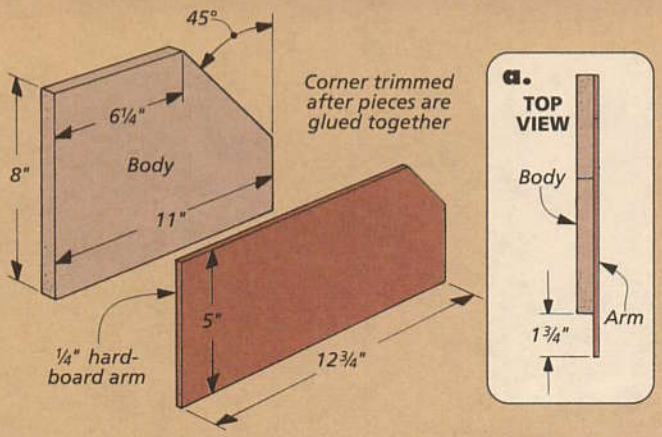

OUTDOOR LANTERNS

Here's an outdoor lighting project that really shines — night and day.

There are two things that can dramatically improve the appearance of a home — landscaping and lighting.

I decided to focus on the lighting. What I came up with are these old-fashioned looking lanterns (made of cedar and *Plexiglas*). They fit right into any landscape and are bound to attract attention — day or night.

But don't let their looks fool you into thinking this is a difficult or complicated project. The joinery is straightforward, consisting mostly of half laps and dadoes.

Plus if you plan on making several of these lanterns (like I did), we've included some techniques on making multiple small parts quickly, easily, and safely.

ELECTRICAL. And don't worry about the wiring. We started with a common low-voltage transformer and some outdoor cable from a home-center. Then to get the lanterns to really shine, we used 18-watt automotive bulbs and special sockets. (For more on this, see page 35).

But if you want a different-style lantern, there's a design option on page 21. With just a few minor changes and some copper tubing, it really takes on a new look.

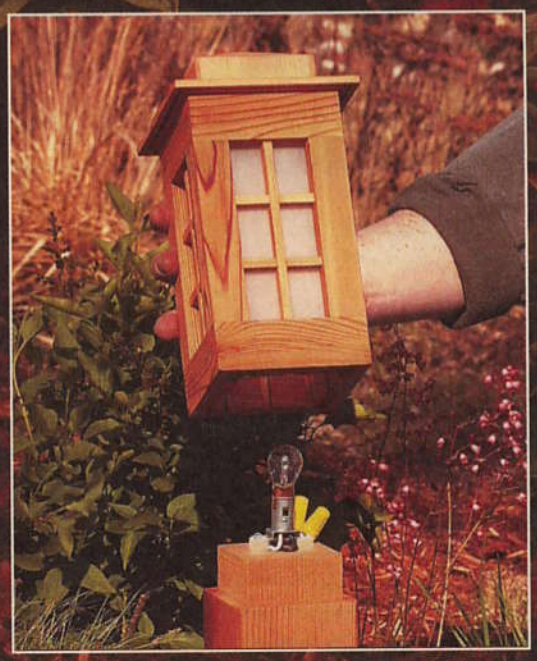

The lantern allows easy access to the lighting fixture for quick bulb changes.

Construction Details

OVERALL DIMENSIONS:
5¼"W x 5¼"D x 10¹⁄₁₆"H

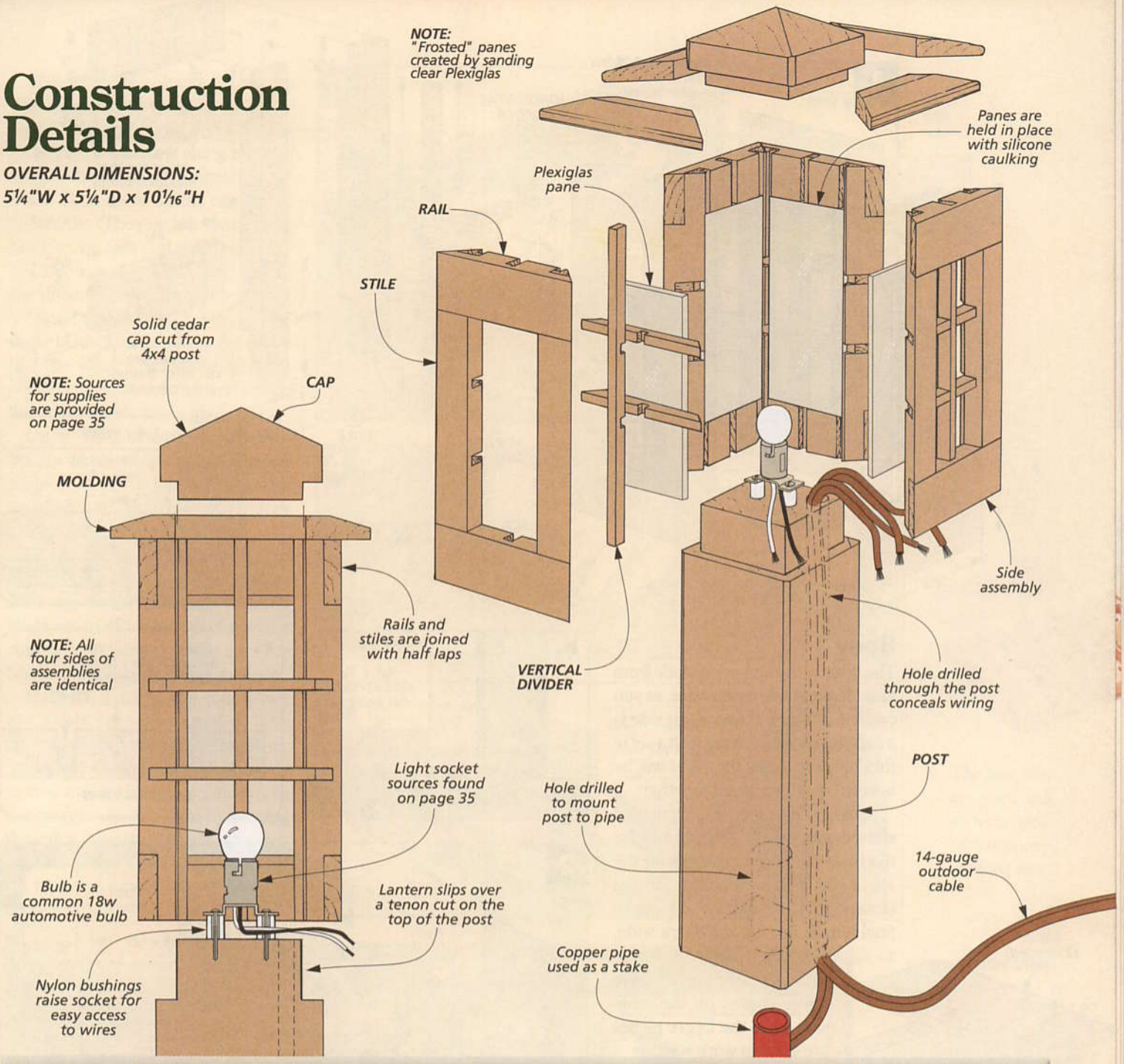

MATERIALS, SUPPLIES & CUTTING DIAGRAM (per lantern)

A Rails (8)	¾ x 1⅜ - 4¼	
B Stiles (8)	¾ x 1 - 8	
C Vert. Dividers (4)	⅜ x ¼- 8	
D Horz. Dividers (8)	⅜ x ¼- 4¼	
E Molding (4)	½ x 1¼ - 5¼	
F Cap (1)	3½ x 3½ - 2¹⁄₁₆	
G Post (1)	3½ x 3½- 12	

- (4) ⅛ x 2⅝ - 5⅝ *Plexiglas* Panes
- (1) Single-Contact Light Socket
- (2) ½" Nylon Bushings
- (2) Wire Nuts
- (1) Single-Contact 18w Bulb
- (2) #6 x 1½" Rh Woodscrews
- (1) #8 x 1½" Fh Brass Woodscrew
- (1) 12-volt Transformer *
- (1) 14-Gauge Outdoor Cable (50 ft.)*
- (1) ¾" Copper Pipe (1 ft. long)
- (1) Plastic Wire Clip

* Note: One needed per set of lanterns.

1"x 8" - 4' Western Red Cedar

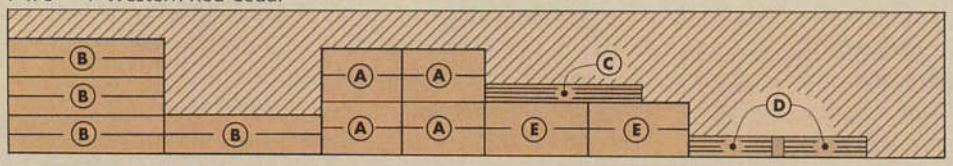

ALSO NEEDED:
2' of 4"x 4" cedar for cap (F) and post (G)

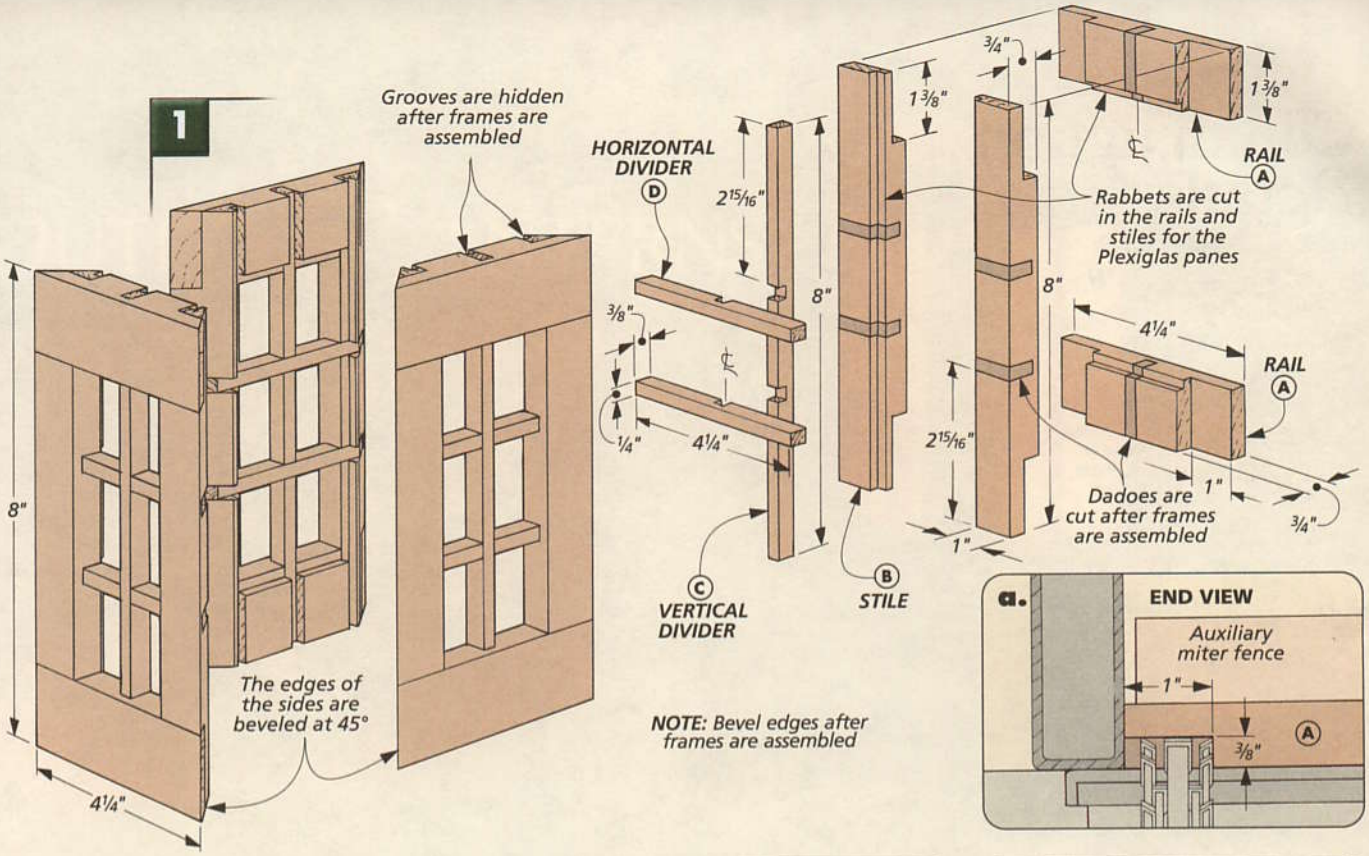

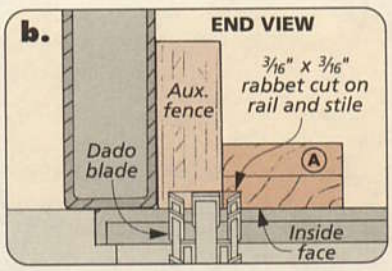

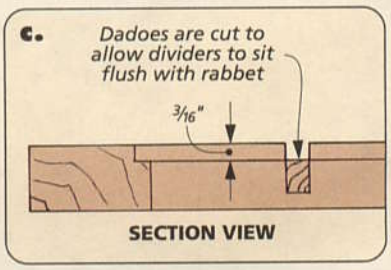

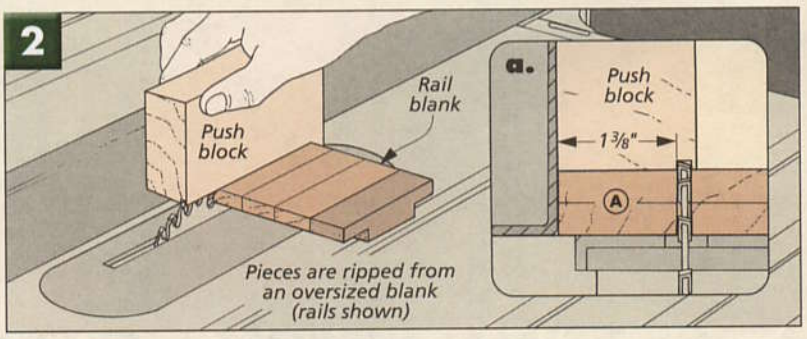

Body

The body of the lantern is made from four identical side assemblies, as you can see in Fig. 1 above. Each side is a half-lapped frame along with a set of thin dividers. Later the sides will be beveled and then glued together.

FRAMES. To make the frames, I started with two 3/4"-thick blanks for the *rails (A)* and two blanks for the *stiles (B)*. (This is enough for *one* lantern.) These blanks are cut to final length but are left extra wide, as shown in the margin drawing. This will allow you to make fewer passes on the table saw. Plus, the larger pieces are safer to work with.

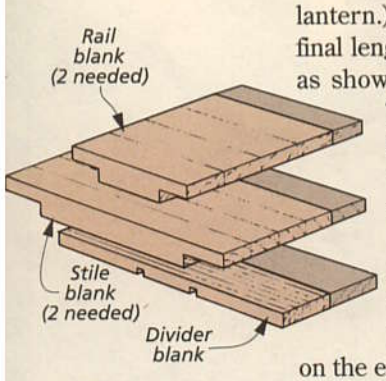

▲ *When making multiple small parts, it's best to start with oversized blanks and cut the joinery first then rip them to size.*

HALF LAPS. After the blanks are cut to length, the next step is to cut the half laps. These are just rabbets cut on the ends of the blanks, as in Fig. 1a. The important thing is that the dado blade is raised exactly half the thickness of the stock. This will ensure the faces will be flush when the frames are assembled.

But as you can see in Fig. 1, the half laps are *not* all the same width. The ones cut on the rail blanks are 1" wide, but the two blanks for the stiles should get 1 3/8"-wide half laps.

With the half laps cut, the rails and stiles can be ripped to final width, as in Fig. 2. Here, you want to make sure they're ripped to fit the half laps you just cut. (For instance, the rails are ripped 1 3/8" wide to fit the half laps in the stiles.)

RABBETS. There's only one more step before the frames can be glued up. A rabbet needs to be cut in each rail and stile (Fig. 1b). Once the frames are assembled, this rabbet will create a recess for the *Plexiglas* pane. So it's important that you cut the rabbet with the *inside* face of the piece down on the table saw.

Now the rails and stiles can be glued into frames using an exterior-grade glue. (I used *Titebond II*.) Also, the rabbets will be exposed on the ends of the frames, but that's okay — they'll be covered up later.

DADOES. At this point, the frames are ready for the three dadoes that will hold the thin dividers, as shown in Fig. 3. These dadoes should be deep enough so the 3/8"-thick dividers will end up flush with the rabbets, just like you see in Fig. 1c.

DIVIDERS. Now you can set all the frames aside and work on the *vertical (C)* and *horizontal dividers (D)*, as in Fig. 1. The first thing to do is plane some oversized blanks to 3/8" thick. Then these blanks can be cut to length. (They're left extra wide just like the rails and stiles earlier.)

This time, the half laps that join the dividers are created by cutting 1/4"-wide dadoes, as in Fig. 4. The dado blade still needs to be set at half the stock's thickness, and the position of the dadoes should match the ones already cut in the frames.

Once the half laps are cut, the blanks can be ripped into 1/4"-wide strips that will fit into the half laps you just cut. Then these dividers can be glued into the frames.

BEVELED EDGES. As you can see in Fig. 5, I beveled the side frames (face up) on the table saw with the blade set to 45°. Safety Note: When cutting these bevels, make sure the blade is tilting away from the fence.

ASSEMBLY. Finally, the four sides are ready to be assembled. The trick to gluing the bevels together without the assembly collapsing is to use masking tape, as shown in the margin photo. Begin by placing the sides edge-to-edge with the *outside* faces up. Then after applying the tape, you can flip the pieces over, apply glue, and "fold" the body up.

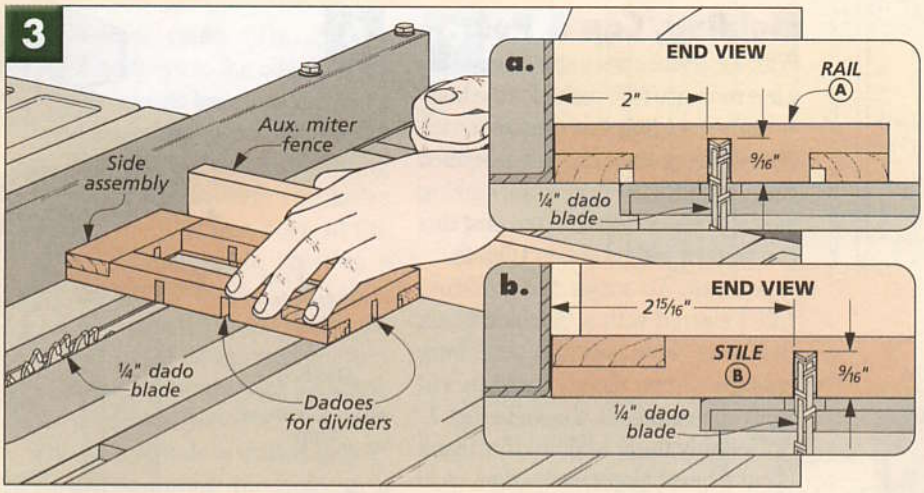

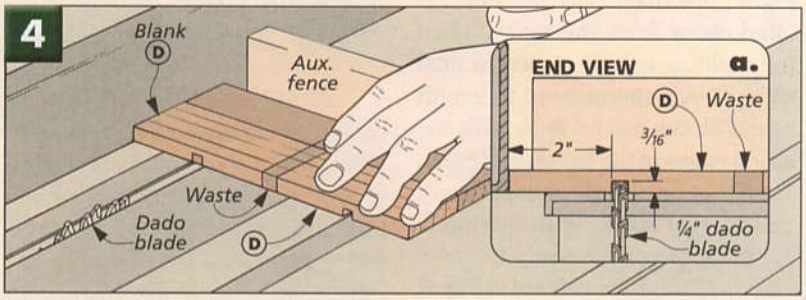

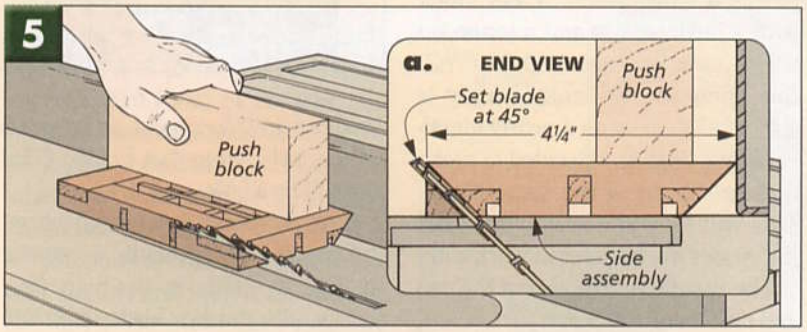

▲ *The four sides are glued and then clamped with ordinary masking tape.*

DESIGN OPTION

Here's a quick and easy version of the lantern with a little different look.

The side frames start out the same, but there aren't any dividers. Instead, I drilled 1/4"-deep holes in the *stiles (B)*, as shown in Fig. 1. Then I added pieces of 1/4" copper tubing while assembling the frames.

After gluing up the frames, they can be beveled along the sides and assembled just like the original design.

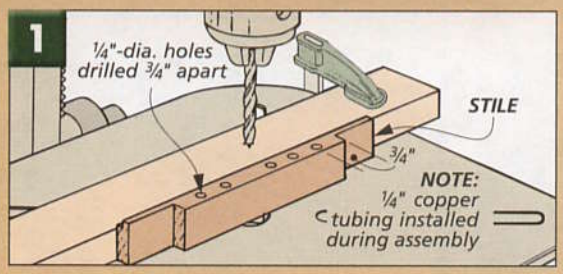

Now before gluing the four frames together, cut a 45° chamfer 3/8" deep on the top and bottom edges, as shown in the margin drawing.

The top of this version of the lantern has also been modified. As you can see in the margin drawing, the cap is taller and has a slightly steeper angle for the top peak (35°). Plus, there isn't a layer of molding under the cap.

SIDE SECTION VIEW

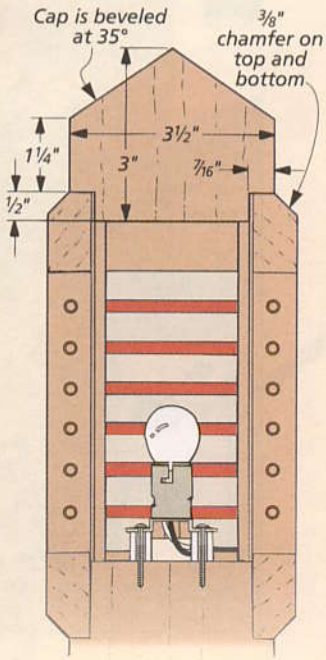

Molding, Cap & Post

With the frames assembled, there are a few more parts to make for the body — some molding that creates a roof-like overhang and a cap with a beveled peak, as in Fig. 6. And while making the cap, I also worked on the post that the lantern will be set on (Fig. 9).

MOLDING. To make the *molding (E)*, I started with a ½"-thick blank that was wide enough and long enough so two pieces could be cut from each edge, as shown in Fig. 7.

The only thing to do to this blank is cut a bevel along each edge, as in Fig. 7. Just make sure the blade is tilted *away* from the fence. Then the molding can be ripped to final width (1¼") and mitered to length so the pieces will be flush with the inside edges of the lantern (Fig. 6a). Then they can be glued in place.

CAP & POST BLANK. With the molding in place, you're ready to make the *cap (F)*. As you can see in Fig. 6, this is a short piece of 4x4 stock with a peak on top and a tenon on the bottom. And since the *post (G)* that supports the lantern body is also a 4x4 piece with a nearly identical tenon (Fig. 9), I decided to make both parts out of the same blank. This will save you some time, and the pieces will be safer to work with.

The first thing to do is cut the cap and post blank to length. In my case, I wanted a 12"-long post, so I started with a 14½"-long 4x4 blank. (The cap will be a little over 2" long.)

BEVEL CAP. Next, I cut the peak on the cap end of the blank, as shown in Fig. 8a. This is done in four passes with the saw blade tilted 25°. And to get the peak to come to a perfect point, it's a good idea to clamp a stop block to an auxiliary miter gauge fence so the post can't shift.

CAP & POST TENONS. After cutting the peak, the next step is to form the tenons. Both the cap and post

▲ *To resemble frosted glass, the Plexiglas panes are scuffed on each side with a finish sander.*

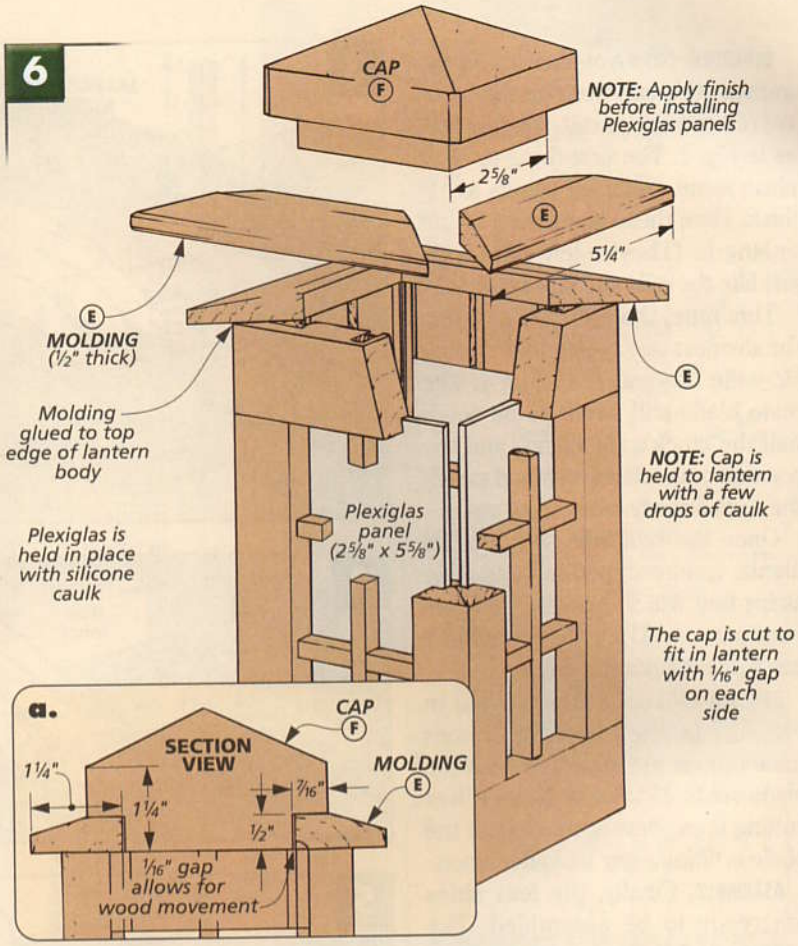

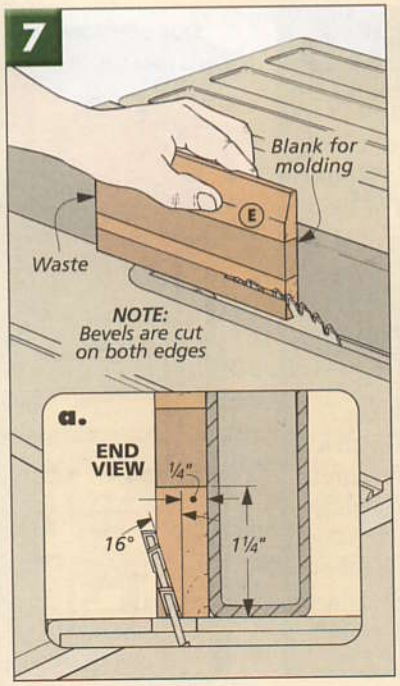

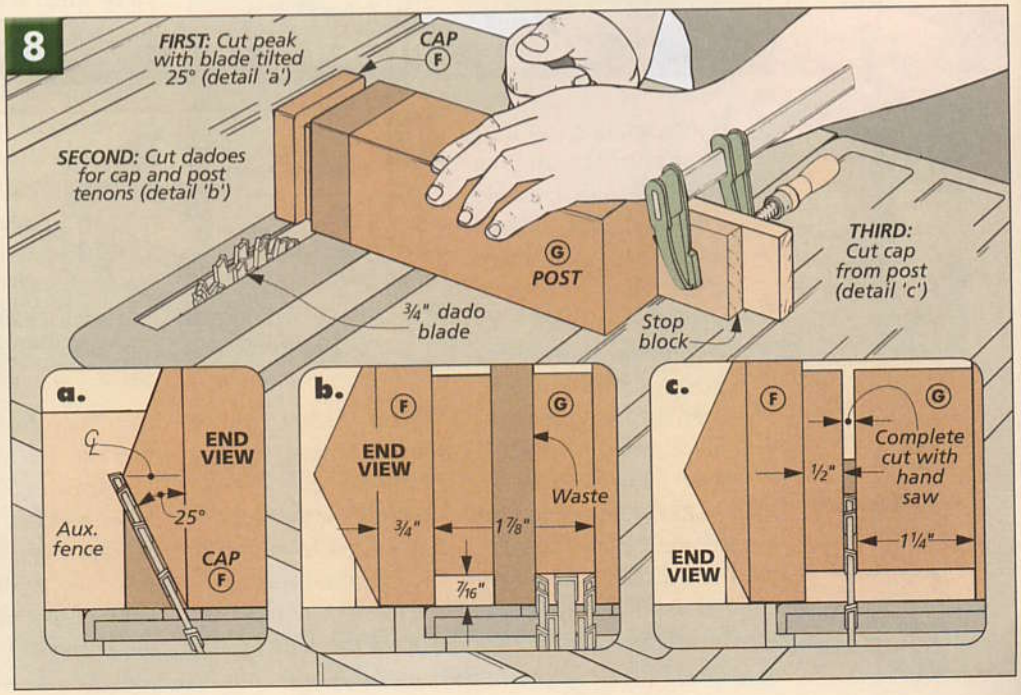

tenons are sized to fit into the open ends of the lantern body with a 1/16" gap on each side, as in Fig. 6a. (This allows room for the cap and post to expand freely.) The only difference between these two tenons is their lengths. (And neither is critical.)

Even though there are going to be two tenons, both are cut by making a single, wide dado that wraps around the blank, as in Fig. 8b. And to make sure the shoulders align, you'll want to use a stop block.

To do this, you'll cut one set of shoulders around the blank, reset the stop block, and cut the second set of shoulders. Then you can remove the waste in between.

CUT THE CAP. Now you're ready to cut the cap piece free from the blank. To avoid kickback, I cut only part way through the post on the table saw, as in Fig. 8c. Then I finished the cut with a hand saw.

FINISH. After the cap is cut free from the post, it can be added to the body. But before you do this, it's a good idea to apply the finish and add the *Plexiglas* panes. To finish these lanterns, I brushed on two coats of an exterior oil-based finish to the inside and outside of all the pieces.

PLASTIC PANES. When the finish is dry, the 1/8" *Plexiglas* panes can be cut to fit into the rabbeted openings. Then to give these panels the look of frosted glass, I sanded both sides with a finish sander using 120-grit sandpaper, just like you see in the photo on page 22.

At this point, the panes and cap can be installed with a few drops of clear silicone caulk. (The silicone caulk will adhere to the oil-based finish that's already been applied.)

Now you're ready to complete the post. This is just a matter of cutting it to length and drilling two holes (Fig. 9). The first one goes all the way through the post, creating a channel for the wires. To do this, you'll need a corded hand drill and a long bit. (I used an electrician's bit.) Start at the top and try to keep the bit as straight as possible.

The second hole is drilled only 2" deep for mounting the post on a piece of 3/4" copper pipe that's placed in the ground (Fig. 9).

WIRING THE LANTERNS

Mounting the lamp socket and wiring the lanterns is the last step. As you can see in Fig. 9, the lamp socket is screwed to the top of the post. But I also used a pair of 1/2"-long nylon bushings to raise the bulb and make running the wires easier.

Wiring the lantern isn't complicated. First to lower the household current (110 volts) to 12 volts, you need to mount a transformer near an exterior outlet. (To determine what size transformer you need, check out the box below.)

Now you can run the cable to the first lantern and loop it up through the hole. Then cut and strip the cable and wire it to the socket with wire nuts, as in Fig. 9a.

When the wiring is complete, you can set each lantern on its post and secure it with a single brass woodscrew, as shown in Fig. 9.

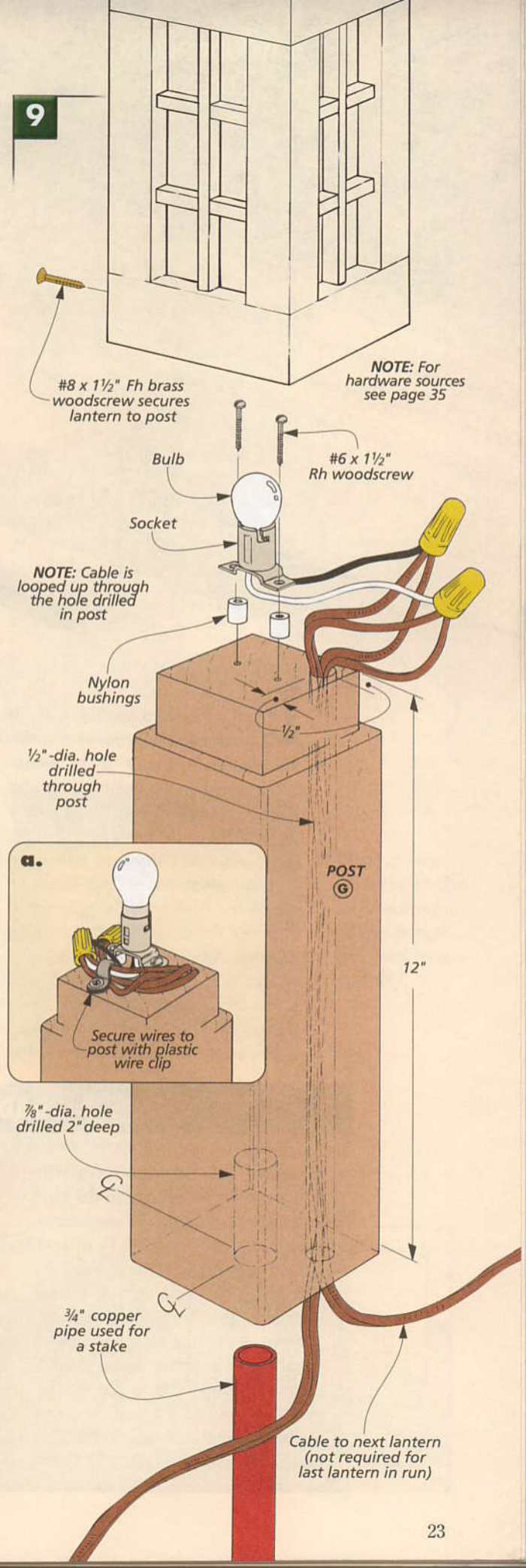

TRANSFORMER SIZE

For low-voltage lighting, you'll need a transformer to convert your house current to 12 volts. But the *size* of the transformer will depend on the number of lanterns and the wattage of the bulbs. In my case, I used five 18w automotive bulbs. (Sources are listed on page 35.) This meant I needed *at least* a 90w transformer. But the closest I was able to find was a 121w transformer, which worked just fine.

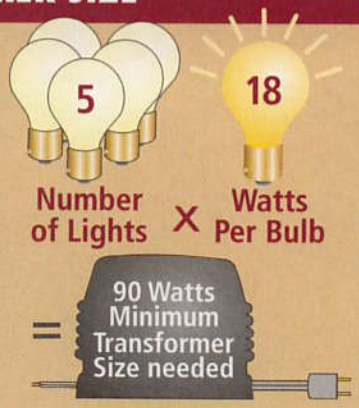

DADOES AND GROOVES

Don't overlook them. Dadoes and grooves are a quick and simple way to add strength and integrity to many of your woodworking projects.

If you really stop and think about it, dadoes and grooves are the foundation of many of the woodworking joints we use on a regular basis. But even so, it's pretty easy to take them for granted. After all, they just don't demand the same kind of attention as box joints or dovetails. And making dadoes and grooves doesn't involve any fancy, impressive jigs or special tools.

But despite this, dadoes and grooves are unmatched for their versatility. There is such a wide variety of ways that they can be used in building furniture. They can strengthen a joint or simply help keep pieces aligned. They're great for holding panels or drawer bottoms. They are often combined with other types of joints, like tenons and half laps. And they can be used with glue alone or with screws.

USES. There's not really a whole lot involved when it comes to making dadoes and grooves. In the past, they were made entirely by hand, using chisels and planes. Today, all you need is a table saw and a dado blade. (As an alternative, you can use a router and a straight bit.) But there's more to it than just knowing *how* to make them. You also need to know *when* to use them in building furniture projects.

Here's a look at a few ways we commonly use dadoes and grooves and some tips for getting a perfect fit. While this is by no means a complete list of all the ways they can be used, hopefully this will give you some ideas on how you might be able to incorporate dadoes and grooves into your next woodworking project.

DADO, GROOVE, OR RABBET?

What's the difference between a dado and a groove? It all has to do with grain direction. A dado runs *across* the grain of the wood. And a groove runs *with* the grain of the wood. This is really the only distinction. Take a look at the first drawing to the right.

RABBET. And what about a rabbet? A rabbet is nothing more than a dado or groove that is cut on the end (or edge) of a board. You can see an example of this in the second drawing to the right.

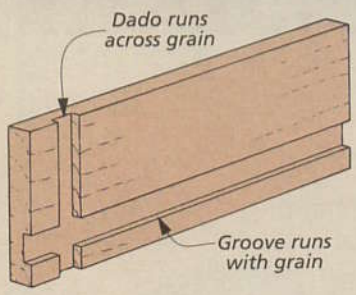

▲ *Grooves run parallel with the grain while dadoes run across the grain, usually at a right angle.*

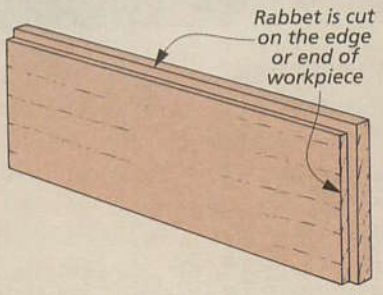

▲ *Rabbets are cut on the ends or edges of a board. They can run with the grain or across it.*

Narrow Grooves

One place where I use grooves all the time is for holding panels, such as the panel in a frame and panel assembly. Grooves can trap a panel and hold it in place very effectively. And when combined with stub tenon joinery, the result is a very strong frame and panel assembly.

Quite often though, the panel is a piece of 1/4" plywood or 1/4" hardboard. And since these materials are usually a bit under 1/4" in thickness, you can't use a stack dado blade to cut the grooves.

SINGLE BLADE. Instead, I cut narrow grooves with a single saw blade. Just set the rip fence so the blade is roughly centered on the thickness of the stock. Then raise the blade to match the desired depth of the groove. Then as you see in Fig. 1, make a couple passes over the blade, flipping the workpiece end-for-end between passes. (This centers the groove on the thickness of the workpiece.) If the groove is too narrow, nudge the fence away from the blade just a hair and try again.

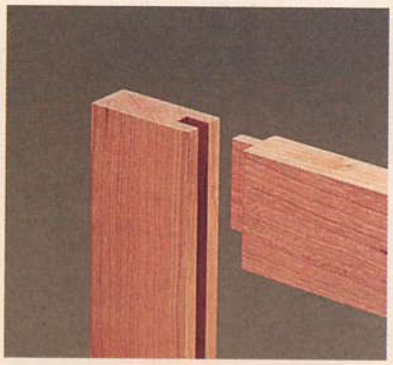

▲ *Narrow grooves can be used to hold panels for doors or drawers. Or they can be combined with stub tenons to create strong frames.*

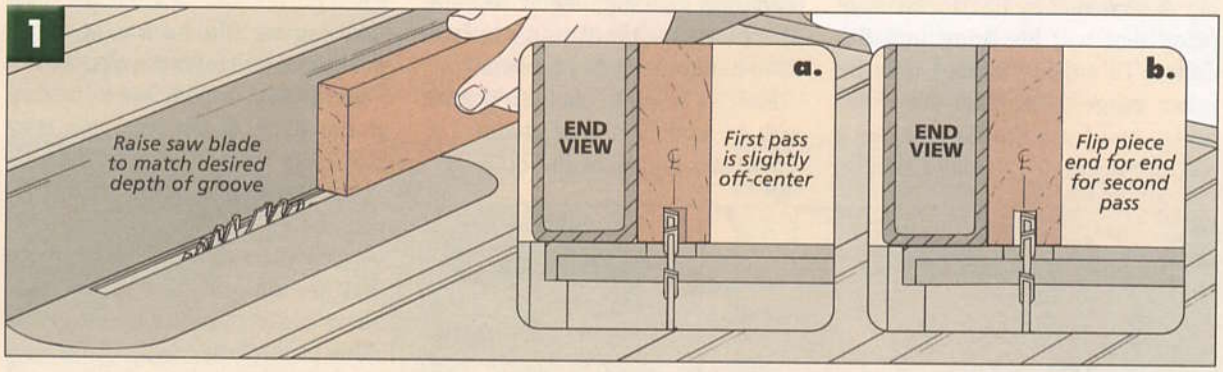

Wide Grooves

When it comes to case construction for furniture projects, I often use grooves. They do two things. First, they lock the individual components together, increasing the strength of the carcase and its ability to resist racking. And second, they make the assembly a whole lot easier, since all the pieces lock together and can't shift out of place.

STACK DADO SET. For most projects, I cut grooves to match the thickness of the stock I'm working with. In these cases, I use a stack dado set to cut the grooves. The trick is to get the dado set adjusted to the correct width. To do this, you'll need to use a combination of chippers along with the outside blades of the dado set. And if you are working with plywood, you'll probably need to use shims between the chippers to fine tune the fit, just like you see in Fig. 1 below. I always make a few test cuts first before cutting the grooves in my actual workpieces.

As you can see in Fig. 2, cutting grooves on a table saw is nearly identical to ripping a board (except for the fact that you aren't cutting all the way through the workpiece). You use the rip fence to guide the workpiece and position the groove on the face of the board. Although the dado blade will be covered by the workpiece, it's still a good idea to use a push block.

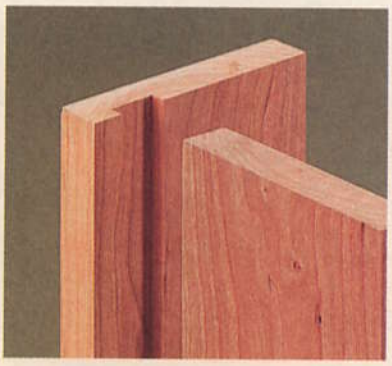

◄ *Wider grooves are useful in case construction for adding strength and simplifying assembly.*

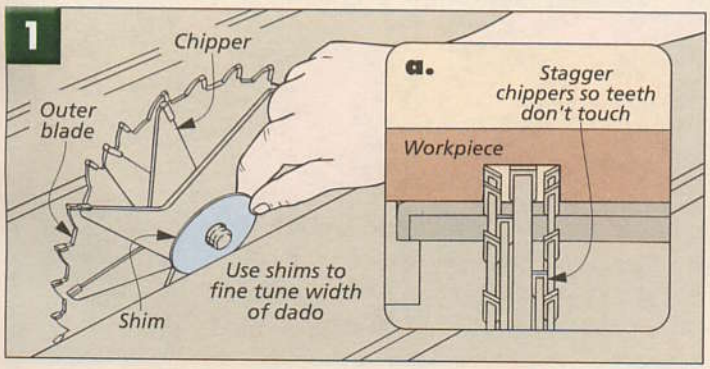

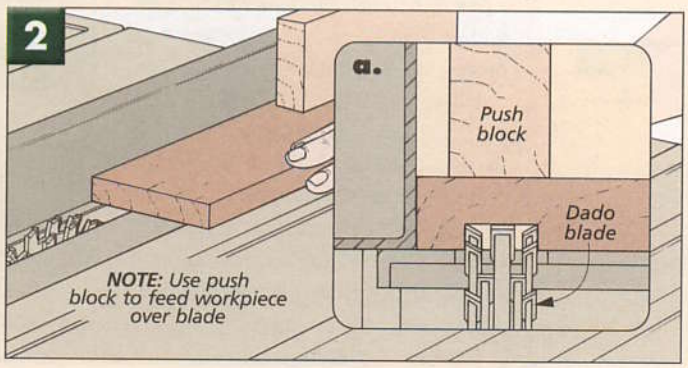

Dado Joint

Joining end grain to face grain is always a tough situation. Neither glue nor screws hold very well in end grain. This is where a dado joint like the one shown here comes in handy.

By cutting a dado in one piece, you create a pair of shoulders or "ledges" to hold the mating piece. This locks the piece in place, preventing it from twisting and racking.

To create this joint, I usually use the table saw. Here again, I set up the dado blade to match the width of the dado I want to cut (which is usually determined by the thickness of piece that will be going into the dado). To cut the dado, I use the miter gauge to support the workpiece. And I use the rip fence as a stop to position the dado on the workpiece, as shown in Fig. 1.

Quite often, I need to make a series of dadoes that are evenly spaced from either end of the workpiece (like the display case on page 28, for example). In this case, you can cut the dadoes in "pairs" by flipping the workpiece end for end before readjusting the rip fence for the next set of dadoes.

CROSS-GRAIN CUTS. Cutting dadoes is a little bit different than cutting grooves. Because you are cutting across the grain, there is a greater tendency for chipping or tearout. There are a couple of things you can do to minimize these problems.

First, it helps to back up the cut with an auxiliary fence attached to your miter gauge, as in Fig. 1. This fence prevents the dado blade from "blowing out" the back edge of the workpiece as it exits the cut.

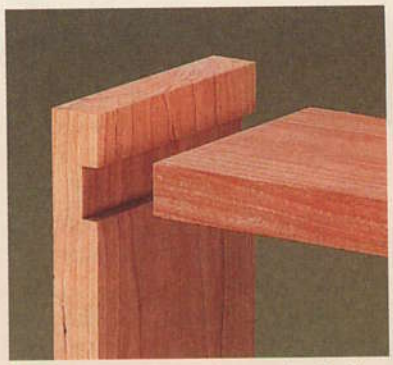

▲ *A dado joint can be used to hold a shelf in a bookcase or to join the parts of a cabinet or case.*

SPLINTERING. In addition to tearout at the back of the cut, you may also have to deal with splintering along the edges of the dado. As you can see in Fig. 1a, some dado sets have outer blades with teeth that are designed to "score" the fibers of wood along the dado sides to minimize splintering. But depending on how sharp your blade is or the type of material you are cutting, you may still experience some splintering.

In these cases, I often find that a slower feed rate helps to reduce this splintering. And if the splintering is really bad, I place a piece of masking tape over the area where the dado is going to be cut. The tape helps to back up the wood during the cut, keeping any splintering along the edges to a minimum.

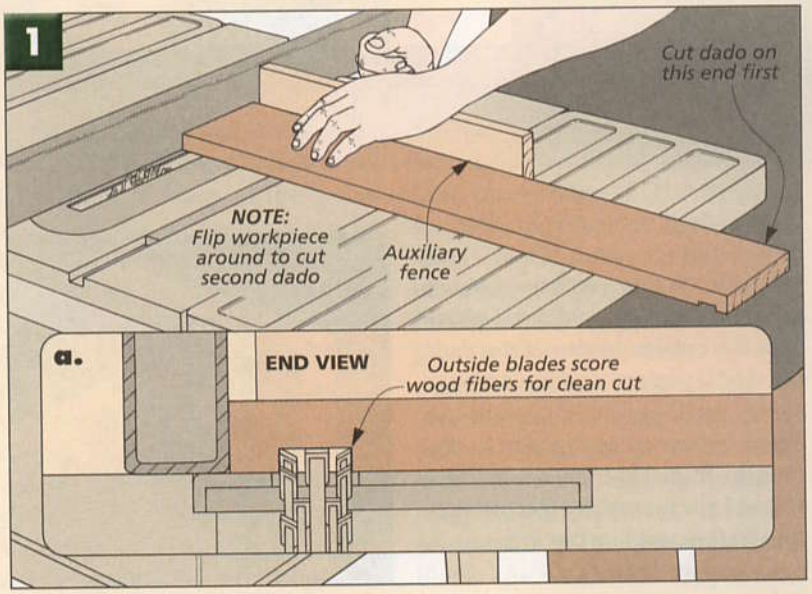

RIP FENCE AS STOP

As a general rule, you shouldn't use the rip fence as a stop when pushing a piece through the saw with a miter gauge. The danger is that the cut-off piece can kick back at you.

However, when cutting dadoes, you're not cutting completely through the workpiece. So there's no cut-off piece to worry about. But if using the rip fence as a stop still makes you feel uneasy, an alternative is to clamp a block of wood to your fence as a stop.

Non-Through Cuts. It's acceptable to use the miter gauge and rip fence together when you're not cutting completely through the workpiece.

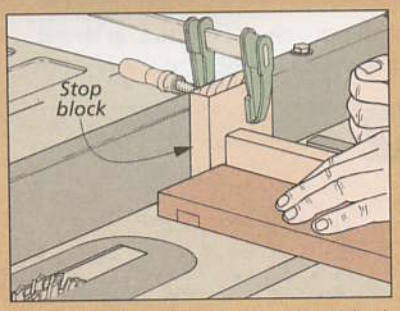

Stop Block. Clamping a stop block to the rip fence allows you to use the miter gauge for through cuts as well as non-through cuts.

Dadoes for Drawers

One place where dadoes come in handy is in making drawers. Drawer joints are subjected to a lot of strain and pressure from the constant opening and closing of the drawer.

Although you could join the sides of the drawer to the front and back with butt joints or rabbets, neither of these provides much strength. And setting up to make dovetails can be time-consuming and tricky. So I often use a tongue and dado joint, like the in the photo at right. This joint offers a good compromise — it's reasonably strong and isn't difficult to make on a table saw.

Basically, tongues cut on the ends of the drawer front and back fit into dadoes cut in the drawer sides. This creates an interlocking joint that stands up to the tugging of the drawer as it is opened and closed. (This joint works best with false front drawers. For drawers without false fronts, see the locking rabbet joint below.)

TWO-STEP. As you can see by the drawings below, this joint is made in two steps. First, dadoes are cut near the ends of each drawer side (Fig. 1). I usually do this with a dado blade, using the rip fence as a stop and the miter gauge to guide the workpiece through the saw.

The second step is to create the tongues on the ends of the front and back. This is done by cutting a rabbet on each end. As shown in Fig. 2, I "bury" the dado blade in an auxiliary fence that's attached to the rip fence. The trick is to size the tongues to fit snugly in the dadoes cut in the drawer sides.

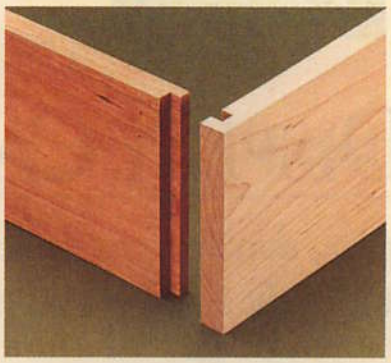

◄ *The drawer front and back interlock with the sides using this tongue and dado joint.*

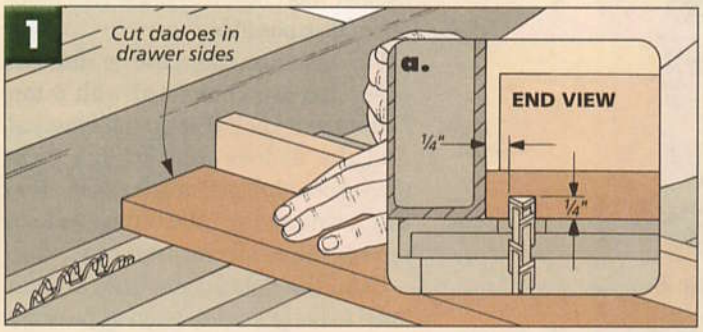

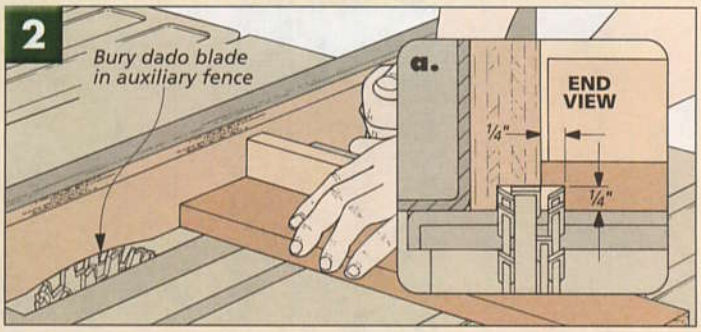

Locking Rabbet

One of my favorite joints for making drawers is a locking rabbet joint. It's similar to the joint shown above, but it provides a little more glue surface. And this joint works well even if you aren't using a false front.

In this joint, the drawer front and back get a slightly different treatment. First, a centered dado is cut on each *end* of the drawer front and back, as shown in Fig. 1. This dado is cut in two passes, turning the workpiece around after the first pass. The goal here is to create a tongue that will fit into the dadoes in the sides of the drawer. (To hold the workpiece upright while cutting the dadoes, you will need a jig like the one shown on page 17.)

Next, simply trim back the tongues by nibbling away the waste in a couple of passes (Fig. 2).

The sides of the drawer are dadoed just like in the previous joint (see Fig. 1 above). When the drawer is assembled, the drawer sides should be flush with the ends of the drawer front and back. W

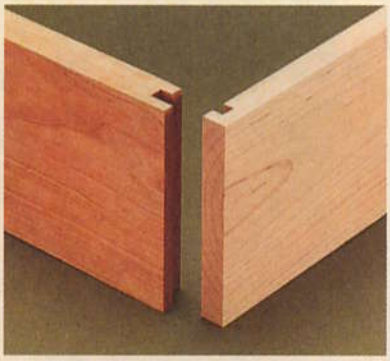

▲ *A locking rabbet joint looks good, is fairly easy to make on the table saw, and provides a reasonable amount of strength.*

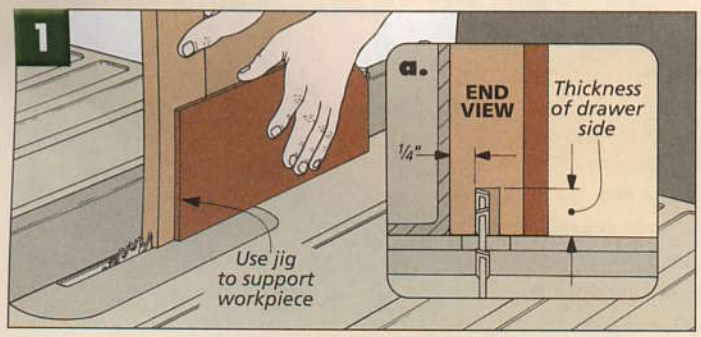

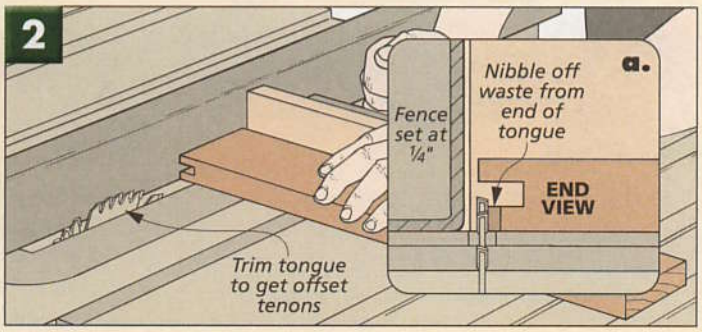

DISPLAY CABINET

If you think elegant projects have to be time-consuming and hard to build, you might want to take a close look at this versatile display cabinet.

If you're short on both time and wall space, here's a project that will take up very little of either. It's a compact cabinet that hugs the wall while it shows off (and protects) your display items. And nearly every design detail of this cabinet was chosen to make it as quick to build as possible.

For instance, the case is just two sides that are connected with a top, bottom and shelf that are all identical. And the dadoes used to join these pieces couldn't get much easier. (For the inside story on cutting dadoes, refer to the article on page 24.)

Even the doors have been streamlined to be as easy to build as possible. Instead of a traditional mortise and tenon joint, I built these with a bridle joint, which has the advantage of being cut entirely on the table saw. (This is described in detail on page 17.)

Because this cabinet takes up very little wall space, it'll work in almost any room in your house, including my personal favorite: the shop. And as you can see in the photo below, this meant making a few minor changes.

To maximize the storage space, I built this tool cabinet with contrasting solid-wood panels for the doors. For more on adapting this cabinet to store hand tools, see page 34. ►

Construction Details

OVERALL DIMENSIONS:
24"W x 5⅛"D x 31"H

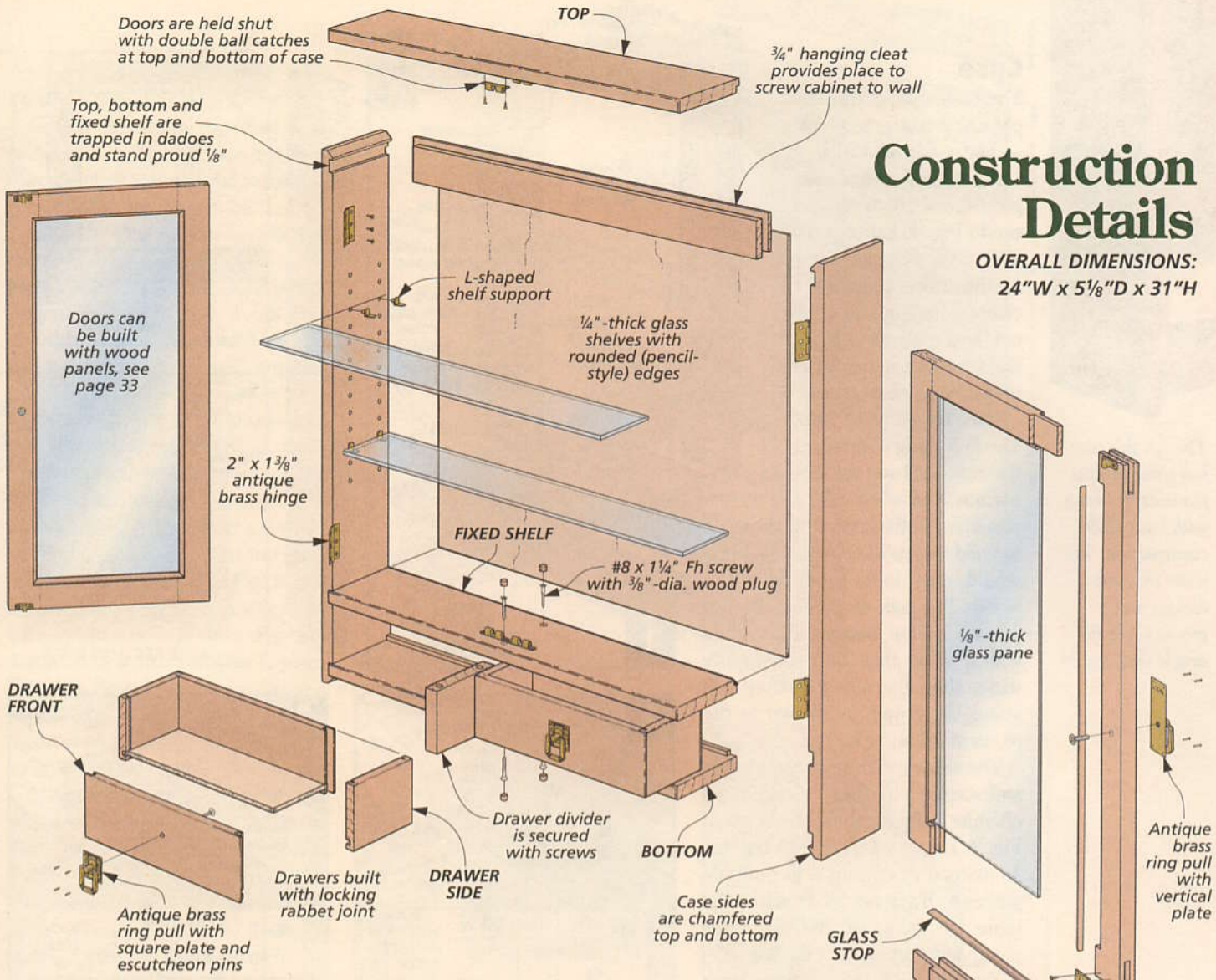

NOTE: Hardware sources are listed on page 35

CUTTING DIAGRAM

¾" x 7" - 96" Cherry (4.7 Bd. Ft.)

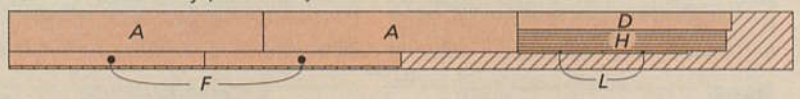

¾" x 7" - 96" Cherry (4.7 Bd. Ft.)

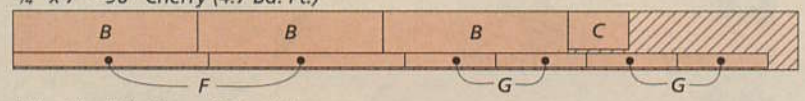

½" x 4" - 72" Cherry (2 Sq. Ft.)

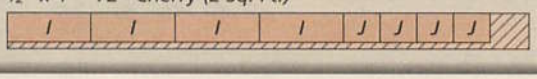

ALSO NEEDED: One 24" x 48" sheet of ¼" cherry plywood

MATERIALS & SUPPLIES

A Sides (2)	¾ x 5 - 31	
B Top/Btm./Fixed Shelf (3)	¾ x 5⅛ - 23	
C Drawer Divider (1)	¾ x 5 - 3½	
D Hanging Cleat (1)	¾ x 2½ - 23¼	
E Back (1)	¼ ply. - 23¼ x 22⅞	
F Door Stiles (4)	¾ x 1¾ - 24⅛	
G Door Rails (4)	¾ x 1¾ - 11 3/16	
H Glass Stop (6)	¼ x ¼ - 22 rgh.	
I Drawer Frts./Bks. (4)	½ x 3 7/16 - 10 13/16	
J Drawer Sides (4)	½ x 3 7/16 - 4½	
K Drawer Btms. (2)	¼ ply. - 4 3/16 x 10¼	
L Drawer Stops (2)	¼ x ¼ - 10⅞	

- (4) #8 x 1¼" Fh Woodscrews
- (4) ⅜"-dia. Wood Plugs
- (2) ¼"-Thick Glass (3⅞" x 22¼")
- (8) L-Shaped Shelf Supports
- (2) ⅛"-Thick Glass (8 5/16" x 21¼")
- (1 pkg.) ½"-Long Brads
- (2 pr.) 2" x 1⅜" Hinges w/Screws
- (2) Ant. Brass Square-Plate Ring Pulls
- (2) Ant. Brass Vertical-Plate Ring Pulls
- (4) Double Ball Catches w/Screws

*Note: The supplies listed above are for the cabinet design with the glass-paneled doors.

▲ *Though this case has some unique features, it's built with basic dado construction. For more on cutting dadoes and grooves, see the article on page 24.*

Case

The basic case of this display cabinet is quite simple — just a pair of sides that trap a top, bottom and a single, fixed shelf, as you can see in Fig. 1. Later, you'll add a vertical divider to create the drawer openings, a cleat for hanging the cabinet, and a plywood back. But for now, you can focus on the basic case pieces.

SIDES, TOP, BOTTOM & SHELF. The first thing to do is cut the *sides (A)* and the *top, bottom* and *shelf (B)* to size from ¾"-thick stock. (I chose to build this cabinet in cherry, but it would also look great in other woods like oak or maple.) Before you rip the top, bottom and shelf to width, note that they're slightly wider than the sides so they will stand ⅛" proud, as shown in the photo at left and Fig. 1b.

The sides require the most work, so I started with them. First, I cut a chamfer on both ends, as shown in Fig. 2. This is a fairly deep chamfer, so instead of cutting it in multiple passes with a router bit, I cut it on the table saw using an auxiliary miter gauge fence to support the piece.

You can leave the auxiliary fence in place while you cut the dadoes to hold the top, bottom, and shelf, as shown in Figs. 1a and 3. And to make sure the dadoes line up across from each other, you'll want to either add a stop to the end of the auxiliary fence or use the rip fence as a stop, as I did in Fig. 3. (You can do this because the cuts don't go all the way through, so there are no waste pieces to kick back at you.)

The last thing to do on the side pieces is drill the series of ⅜"-deep holes for the L-shaped shelf supports that will hold the glass shelves.

Before the case can be assembled, you'll need to do a little work on the top, bottom and shelf. First, the front edge of each needs a 1/16" chamfer, as indicated in Fig. 1b. Then in the shelf and bottom pieces, you'll want to drill the two counterbored shank holes that will hold the

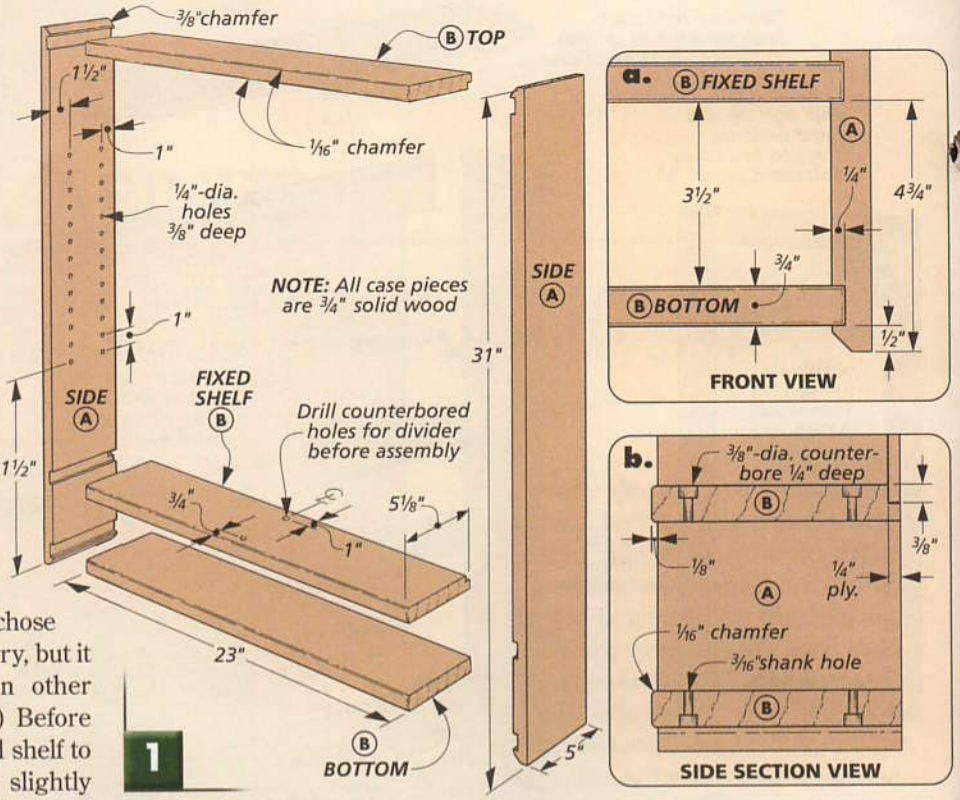

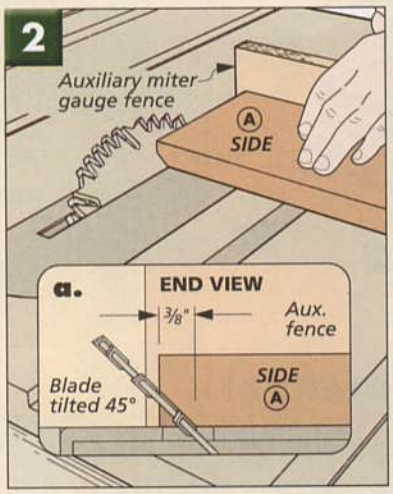

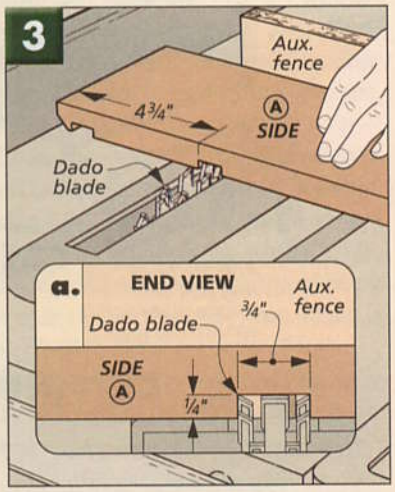

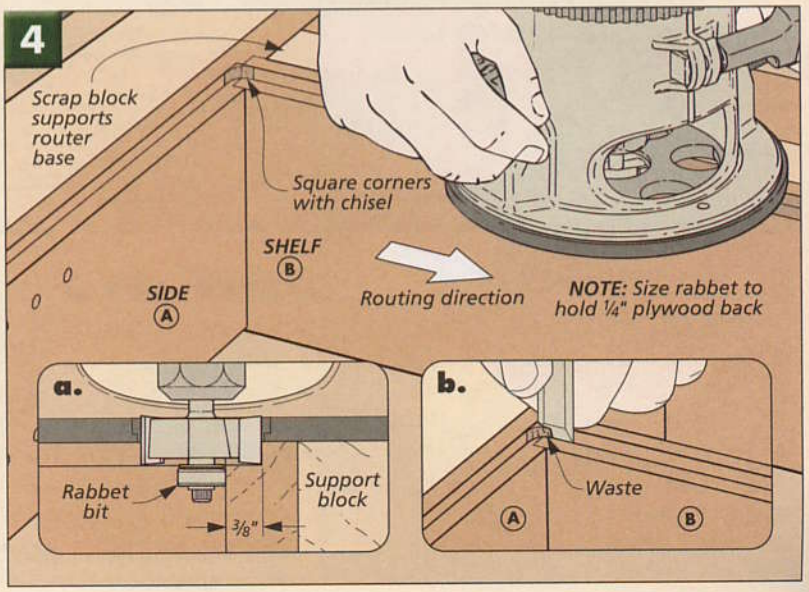

drawer divider. (It would be a bit awkward to do this after assembly.)

Gluing this case together isn't hard. Just remember the top, bottom and shelf stand proud in front of the case and are flush in back.

After the glue on the case is dry, the next thing to do is rout the rabbet for the 1/4" plywood back panel. As you can see in Figs. 4 and 4a, I did this with a hand-held router, using scrap blocks to help support the router base so it wouldn't tip. Then I came back and cleaned up the corners with a chisel (Fig. 4b).

DRAWER DIVIDER. Before you cut the back to size, there are two other pieces to make. First I cut a *drawer divider (C)* to fit between the shelf and bottom, as shown in Fig. 5. But note that the front of the divider sets back 1/8", just like the sides (Fig. 5a).

After screwing the divider in place (Fig. 5a), the screws can be covered with 3/8"-dia. wood plugs. (I'd recommend you use face grain plugs here so they'll be less noticeable.)

HANGING CLEAT. The next piece I added was a *hanging cleat (D)*, as you can see in Fig. 5. This way, when hanging the cabinet on the wall later, I had a 3/4"-thick solid-wood piece to screw through, instead of the 1/4" plywood back.

Making the cleat is a two-step process. It's cut to fit between the rabbets for the back, but to get it to fit flush with the back, you'll need to cut a rabbet around three edges of its front face, as shown in Figs. 5b and 6. The second step is just cutting another rabbet — this time, to match the rabbets in the case for the back, as you can see in Fig. 7.

BACK. When the cleat has been glued in place, you can cut the plywood *back (E)* to size and glue it into the rabbet (Fig. 5b).

GLASS SHELVES. You really don't need to order the glass for the shelves until you order the glass for the doors later. But I'll just mention here that I used 1/4"-thick glass that had polished, "pencil-style" edges.

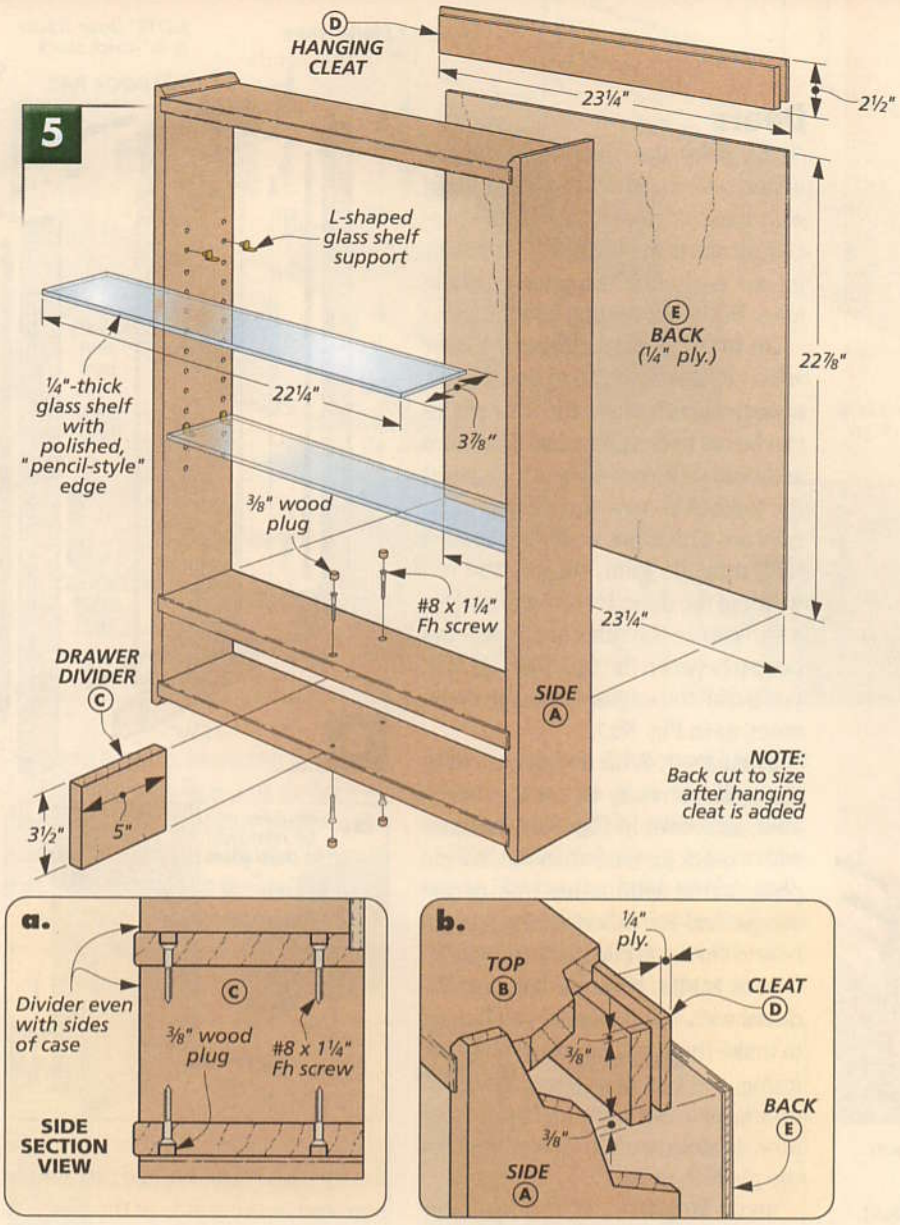

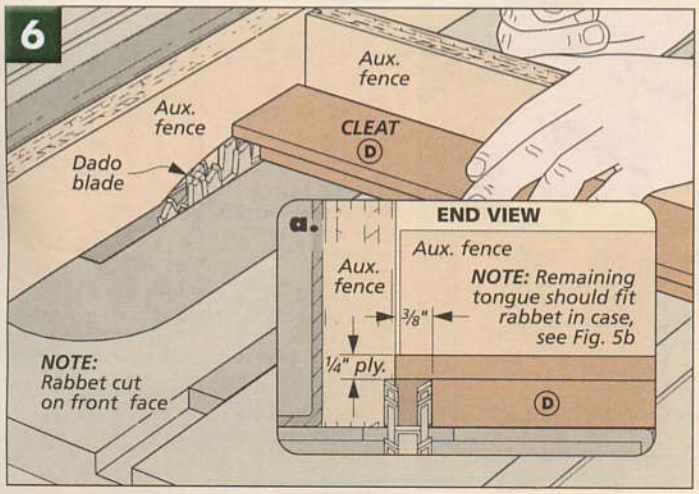

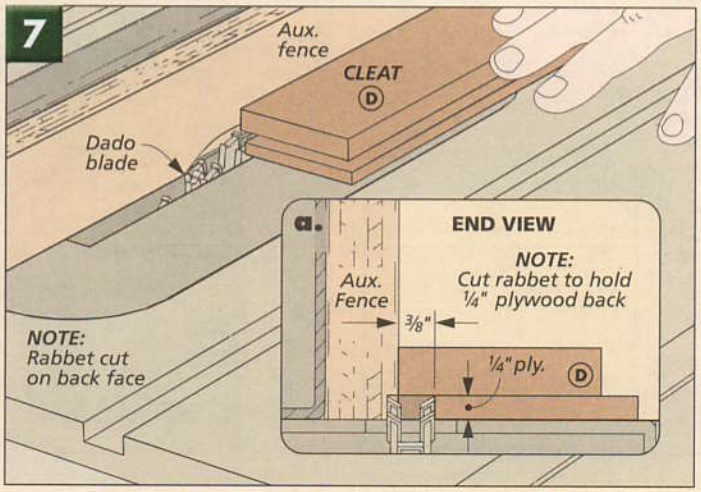

Doors

At this point, the case is ready for the doors, and whether you build them with glass or wood panels, the procedure starts out the same. The door frames are built with a grooved bridle joint. But more on that in a minute.

CUT TO SIZE. Before cutting the *door stiles (F)* and *rails (G)* to size (Fig. 8), measure your case so the door pieces can be cut to fit its opening. The stiles are sized so there will be a 1/16" gap at the top and bottom of each door. The rails are a bit more work, but at least with a bridle joint, they're the full width of the door. Here, I allowed for a 1/16" gap on the sides of the case but no gap between the two doors. (Later, you'll trim the edges where the doors meet, as in Fig. 8b.)

BRIDLE JOINT. With the pieces cut to size, you're ready to cut the bridle joint, as shown in Fig. 8a. I came up with a quick jig (shown in the margin photo) that eliminates one of the setups. And I've described the jig (and how to cut the bridle joint) on page 17.

DOOR PANELS. If you're building the doors with wood panels, you'll need to make them *before* you glue up the frame, see box next page. For glass doors, you can glue up the frames now. (Later, you'll rout a rabbet for the glass to fit into.)

HINGE MORTISES. With the door frames glued up, I cut the mortises for the hinges next, as shown in Fig. 9. This can be done at the table saw, and I sized the mortises to match the full depth of the hinge barrel, minus 1/16" for the gap. (The hinges are simply screwed to the inside of the case.)

Now you can rout the back edges of the doors to hold the glass, as in Fig. 10. I used 1/4" *glass stop (H)* to mount the glass (Fig. 10b). And on page 16, there's a "miter box" I used to cut the stops to length. (But you don't want to add the glass until the finish has been applied to the project.)

HANG DOORS. At this point, the doors can be hung in the case. Then you can trim their inside edges to create the 1/16" gap (Fig. 8a) and add the pulls

▲ *This jig lets you cut the open mortises without having to adjust the fence. For details, turn to page 17.*

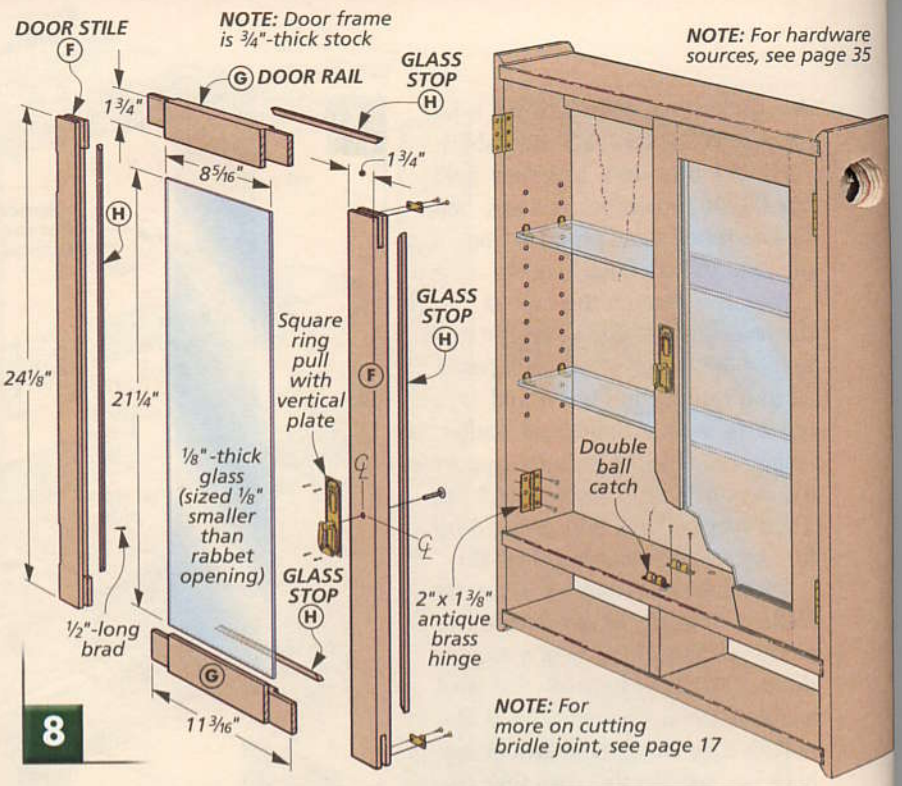

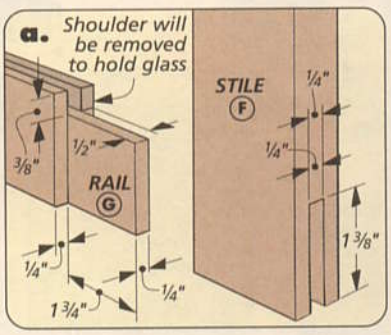

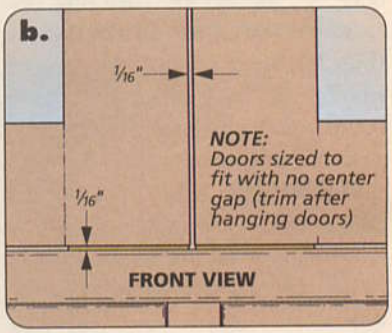

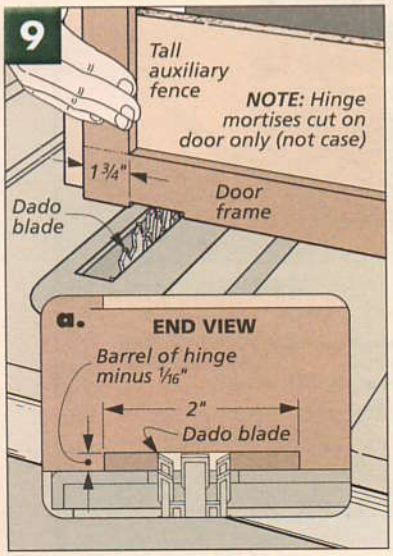

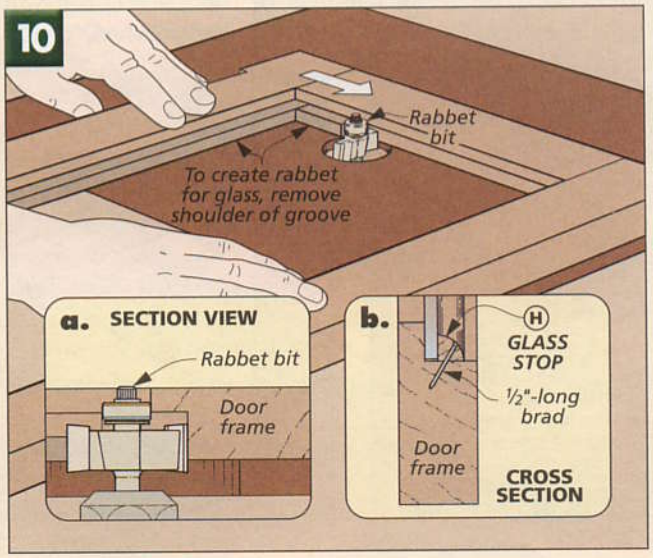

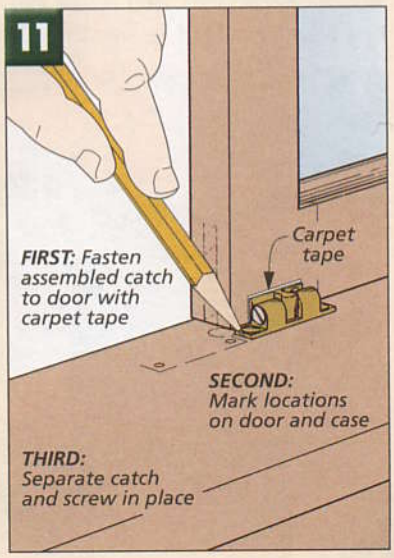

and catches. The double ball catches I used can't be adjusted after they're screwed in place, so for an accurate installation, I positioned them with carpet tape, as described in Fig. 11.

DRAWERS

All that's left now is to build the two small drawers, as shown in Fig. 12. I sized the 1/2"-thick *fronts (I)* and *backs (I)* so the drawers would be 1/16" smaller than the openings in height and width. And the *sides (J)* are sized so the drawers would stop 1/4" short of the back of the case.

LOCKING RABBET. To create a strong drawer without a lot of fuss, I decided to use a locking rabbet joint (Fig. 12a). It looks more complicated than it really is. In fact it can be cut in three quick steps on the table saw.

First, a centered groove is cut on the ends of the front and back pieces, as shown in Fig. 13. The key here is that the height of the blade matches the thickness of the drawer sides.

Next, I trimmed the inside face of the front and back pieces to create a 1/4"-long tongue, as shown in Fig. 14.

The last step is to cut dadoes on the sides (Fig. 15). Just position the dadoes to line up with the tongues cut in the fronts and backs (Fig. 12a).

BOTTOM. Now each drawer piece is ready for a groove that will hold the 1/4" plywood *bottom (K)*, as in Fig. 12b. Then when the bottoms are cut to size, you can glue the drawers together and add the pulls (Fig. 12c).

STOP. All that's left now is to cut two *stops (L)* for the back of the case. They're sized so the drawer will end up flush with the *sides* of the case. (Mine were 1/4" wide.)

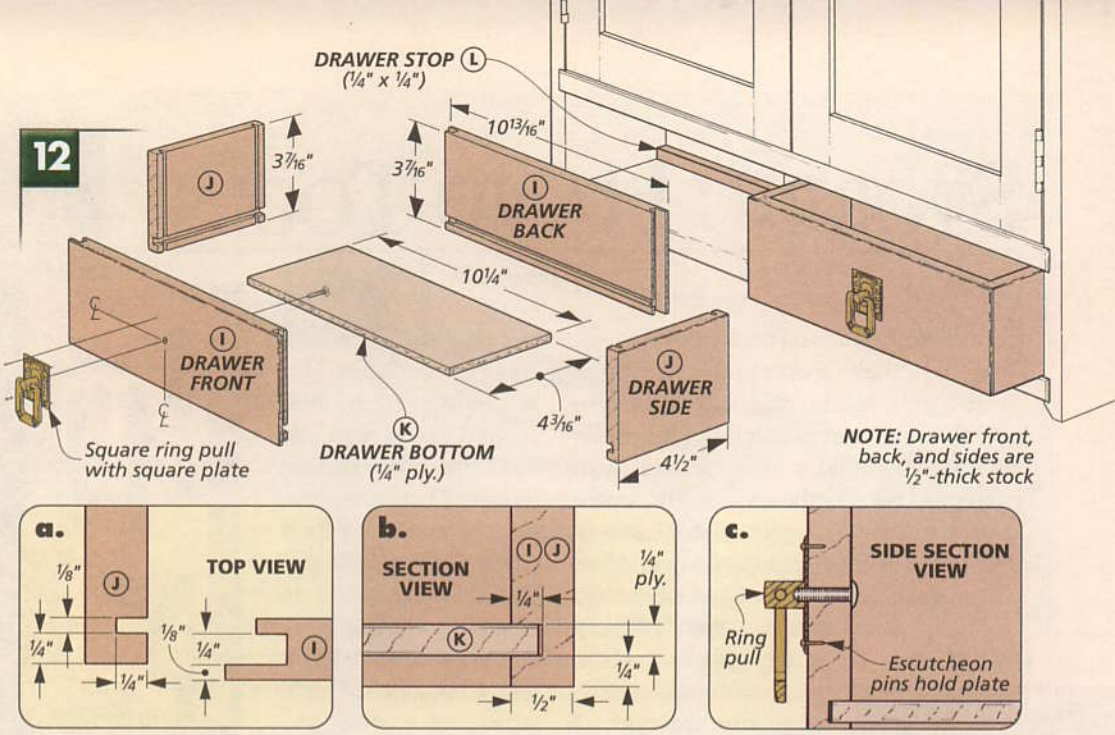

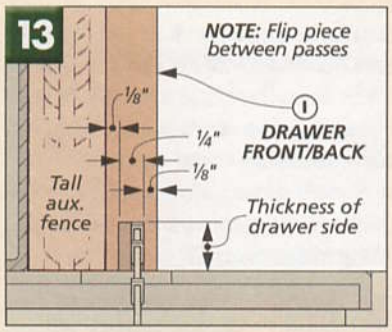

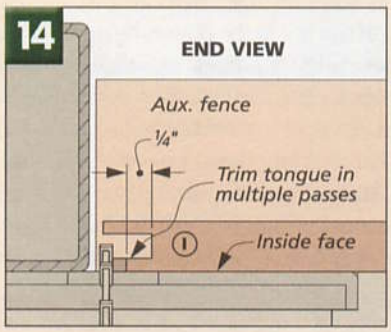

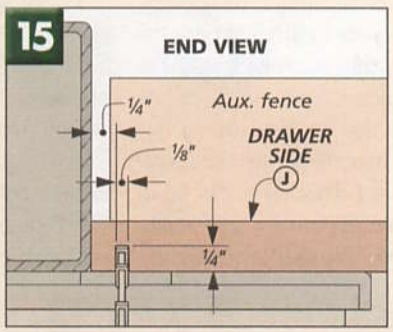

WOOD PANEL DOOR

For an elegant *storage* cabinet, you can build the doors with wood panels instead of glass. (You can also add wood shelves inside.)

Each panel is sized so it'll fit in the grooves when the door is glued together. (Be sure to allow a small gap on each side so the panel can expand and contract.) To create the tongue, all you need to do is rabbet each face, see drawing. And when assembling the frame and panel, remember *not* to glue the panel into the frame.

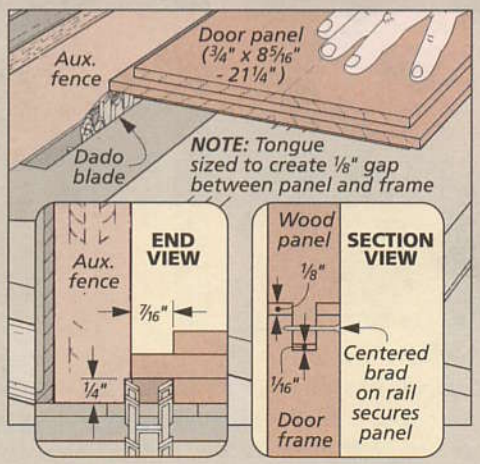

STORING HAND TOOLS

The display cabinet on page 28 is sized just right to make a great tool cabinet for those special hand tools you want to keep accessible — and protected. Of course, whether you build a "fine" cabinet (with cherry and ash, like the one here) or choose less expensive wood is up to you. Either way, there are a few things to keep in mind as you're adapting this cabinet for tool storage.

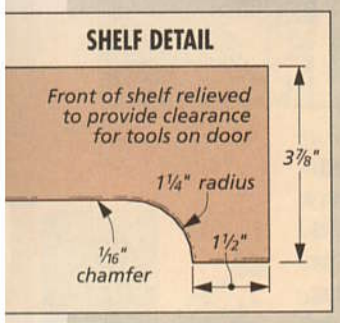

WOOD PANELS. To make the best use of the space inside the cabinet, I decided to build the doors with solid-wood panels instead of glass. This way, I could store tools on the doors, as well as on the shelves (and back). But to do this, you have to make sure there will be enough clearance inside the cabinet. This means cutting shallow recesses in the front edges of the shelves or cutting narrower shelves (and changing the locations of the holes for the shelf pins), as in the drawing above.

ORGANIZING TOOLS. In order to get the most use out of the doors, I decided to spend a little time planning which tools would work best where. To do this, I simply laid the cabinet on its back with the doors propped open. This lets you shuffle the tools around easily until you have the most efficient layout. Then after you have chosen which tools will go where, you can begin making some custom tool holders.

TOOL HOLDERS. It's not hard to design and build your own custom tool holders. The goal is to get them to hang securely so they don't fall (or swing) whenever the door is opened. At the same time, you want them as easy to lift off and set back on as possible. Plus, if there are sharp edges, like the teeth on a hand saw or the point of an awl, you want to be sure that other tools (and your hands) are protected.

There are a number of ways to accomplish this, as you can see in the photos below. Simple kerfs are great for holding the blades of saws, squares, and rulers. For awls, chisels, and files, I drill counterbored holes that trap the handles and then cut slots for easy access. And for marking gauges and block planes, you can make a small shelf platform. Here, you'll want to add small cleats to the edges so the tools won't slide off as the door is opened and closed.

When you're making these small holders, it's best to do as much work as you can with the pieces oversized. This keeps your hands as far away from the blade as possible.

The photos below show just a few of the tool holder ideas we came up with for our cabinet. To see some more ideas, go to the Online Extras section on our web site: www.Woodsmith.com. W

***Scratch awl**. An open hole traps the handle of this awl. And to protect your hands (and other tools), the point sits in a base.*

***Hand saw**. A kerf can be used to protect the teeth of a hand saw. To support the saw, I added a simple base, see main photo.*

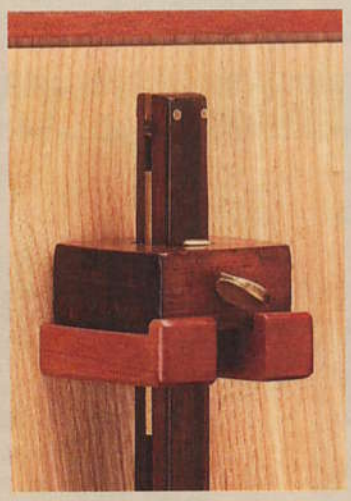

***Marking gauge**. For this marking gauge, a notched block supports the head, and a small lip keeps the tool from sliding off.*

***Combination square**. A small angled block with a shallow kerf is all you need to capture a combination square.*

SOURCES

CONVERTIBLE COFFEE TABLE

To build the convertible coffee table, you'll need the "pop-up table mechanism," shown in the photo at right. The steel, spring-loaded frame is available from two sources: *Rockler Woodworking* (part no. 35460) and *Van Dyke's* (part no. 02002682). The phone numbers and web addresses for these sources are listed at right.

KNOBS & PULLS. In addition to the table mechanism, you will also need quite a few knobs and pulls for the drawers (and false fronts) on the front and back of the base. I chose the "Marston Hardware" collection from *Restoration Hardware*. I used the 1"-dia. knobs (part no. 24030960) for the small drawers and the 3¼"-wide hood pulls (part no. 24030958) for the large drawers.

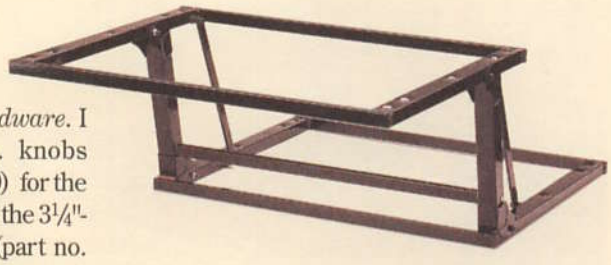

Besides the knobs and pulls, the only other hardware that you'll need to get ahold of (other than woodscrews) is a roll of nylon glide tape, available from woodworking stores and the sources listed at right.

NO-MORTISE HINGES & CHAIN. If you decide to build the coffee table without the table mechanism, you'll need a pair of no-mortise hinges and a short chain. These are probably available locally, but you can also order them from the sources at right.

DISPLAY CABINET

For the small display cabinet on page 28, there's quite a bit of hardware. I ordered the glass from a local glass shop *after* the door frames had been built. The shelf supports, double ball catches, and wood plugs are all fairly common, and if you can't find them locally, you can order these or similar items from the sources at right (listed as "Cabinet hardware").

SQUARE-RING PULLS. The "Pierced Rectangular Plate Hardware" was ordered from *Lee Valley* (see list at right). The square plate pulls (part no. 01A52.20) went on the drawers. The vertical ring pulls (part no. 01A52.61) were used on the doors. You can also order the 2" x 1⅜" antique brass hinges from *Lee Valley* (part no. 00E11.07).

OUTDOOR LANTERNS

The electrical hardware was the key component to the outdoor lanterns on page 18, so I found all the supplies I needed before building the lanterns.

LIGHT SOCKET. The item that'll be the hardest to find will be the light socket. We purchased ours from *Shore Holders*. (You can call them at 800-442-6658 or find them on the web at www.shoreholders.com.) You need to order a single-contact, two-wire bayonet lampholder (part no. 4345-306).

The other supplies will be available locally. The transformer, outdoor cable, wire nuts, nylon bushings (shown in photo at right), and *Plexiglas* can all be found at a local hardware store or home center.

BULB. Your hardware store may not carry automotive bulbs, so you may need to make a trip to an auto supply store. The bulbs you need are 12-volt, single-contact bulbs. We chose 18-watt bulbs (1141) used for turn signals and back-up lights, but for lanterns that are less bright, you can substitute a 7-watt bulb (1155).

MAIL ORDER SOURCES

Similar project supplies and hardware may be ordered from the following companies:

Lee Valley
800-871-8158
www.leevalley.com
Low-friction tape, Square Pulls, Cabinet hardware,

Restoration Hardware
800-762-1005
www.restoration hardware.com
Coffee table knobs & pulls

Rockler Woodworking
800-279-4441
www.rockler.com
Table mechanism, Nylon glide tape, Cabinet hardware, No-mortise hinges & chain

Van Dyke's Restorers
800-558-1234
www.vandykes.com
Table mechanism, Cabinet hardware, No-mortise hinges & chain

Woodworker's Hardware
800-383-0130
www.wwhardware.com
Cabinet hardware, No-mortise hinges & chain

Woodsmith Store
800-835-5084
Nylon glide tape, Cabinet hardware, No-mortise hinges

Woodworker's Supply
800-645-9292
www.woodworker.com
Nylon glide tape, Cabinet hardware, No-mortise hinges & chain

WOODSMITH PROJECT SUPPLIES

To order back issues or a hardware kit from *Woodsmith Project Supplies*, please use our Toll-Free order line, see below. It's open Monday through Friday, from 8 AM to 5 PM Central Time. Before calling, please have your VISA, MasterCard, Discover, or American Express card ready.

If you would prefer to mail in an order, please call the Toll-Free phone number below for more information concerning shipping charges as well as any applicable sales tax.

1-800-444-7527

Woodsmith on the web

- "Online Extras" - Plans, Patterns, & More
- Over 100 Woodworking Tips Online
- Visit Our Readers' Project Photo Gallery
- Project Plans You Can Download
- Catalog of Project Kits, Tools, Jigs, & Plans
- Forums for Woodworking, Tools, & Classifieds
- Links to Other Woodworking Sites
- Order *Woodsmith* & *ShopNotes* Back Issues

www.woodsmith.com

Online Customer Service
Click on Subscriber Services at
www.woodsmith.com

- Access your account status
- Change your mailing or email address
- Pay your bill
- Renew your subscription
- Tell us if you've missed an issue
- Find out if your payment has been received

FINAL DETAILS

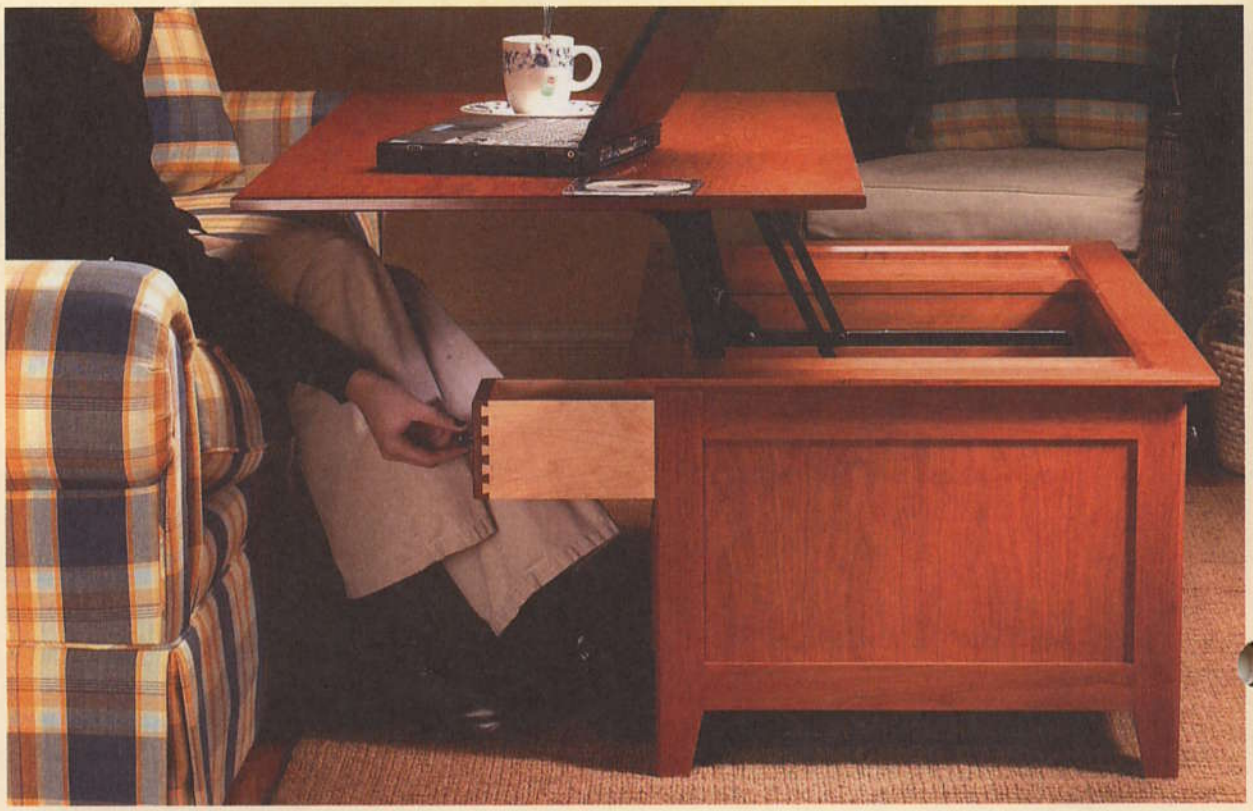

Coffee Table. ► *This is more than just an elegant coffee table. With the help of a unique lift mechanism, it's also a convenient dining table or a handy "desk" for homework. Complete plans start on page 6.*

Outdoor Lanterns. *Build these low-voltage lanterns, and you'll be the envy of your neighborhood. We've included everything you need to know — from building tips to hardware sources. See page 18 for step-by-step instructions.* ►

▲ **Display Cabinet**. *Whether you build this cabinet to store tools or display a favorite collection, you won't need much in the way of time or materials. Instructions begin on page 28.*